MODEL ANSWER

WINTER– 18 EXAMINATION

Subject Title: Television Reception Subject Code: 17547

Important Instructions to examiners:
The answers should be examined by key words and not as word-to-word as given in the model answer scheme.
The model answer and the answer written by candidate may vary but the examiner may try to assess the understanding level of the candidate.
The language errors such as grammatical, spelling errors should not be given more Importance (Not applicable for subject English and Communication Skills.
While assessing figures, examiner may give credit for principal components indicated in the figure. The figures drawn by candidate and model answer may vary. The examiner may give credit for any equivalent figure drawn.
Credits may be given step wise for numerical problems. In some cases, the assumed constant values may vary and there may be some difference in the candidate's answers and model answer.
In case of some questions credit may be given by judgment on part of examiner of relevant answer based on candidate's understanding.
For programming language papers, credit may be given to any other program based on equivalent concept.

Q. No.	Sub Q.N.	Answer	Marking Scheme
Q.1	A)	Attempt any Three	12-Total Marks
	a)	Explain Generation of U and V signals using Adder /Subtractor circuit.	4M
	Ans:	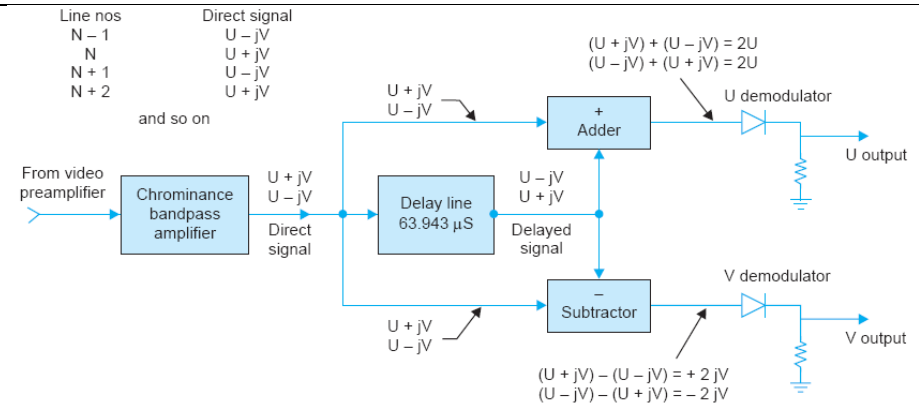 **Chroma Bandpass Amplifier:** It Consist of Bandpass circuit for the selection of chroma signal. Its center frequency is equal to chroma subcarrier itself i.e. 4.43MHz. **Delay Line:** The Object of delay line is to delay the chrominance signal by almost one line period of 64 microseconds **Adder & Subtractor:** The Chrominance amplifier feeds the chrominance signal to the ADDER, SUBTRACTOR and the DELAY LINE. The delay line feeds its output to both the	2M Diagram 2M Explanation

		adder and subtractor circuit and its receive the two signals simultaneously. Adder add U+jV and U-jV to get 2U and Subtractor Circuit produces a signal only of V Information i.e. 2V Whose Polarity alternates from line to line in sync with corresponding phase reversal in the encoder at the transmitting side. **<u>U & V Demodulator:</u>** The U & V Suppressed Carrier amplitude modulated components. These Correspond to the two colour difference signals and bear information about their amplitude and polarity. Because of Quadrature modulation, the two modulation product signals have phase difference of +90 and -90 at any instant with respect to each other. It demodulate the incoming U & V Signals.	
	b)	Draw neat block diagram of IC 7609	4M
	Ans:	**Note: Marks should be given if internal block diagram is made.** 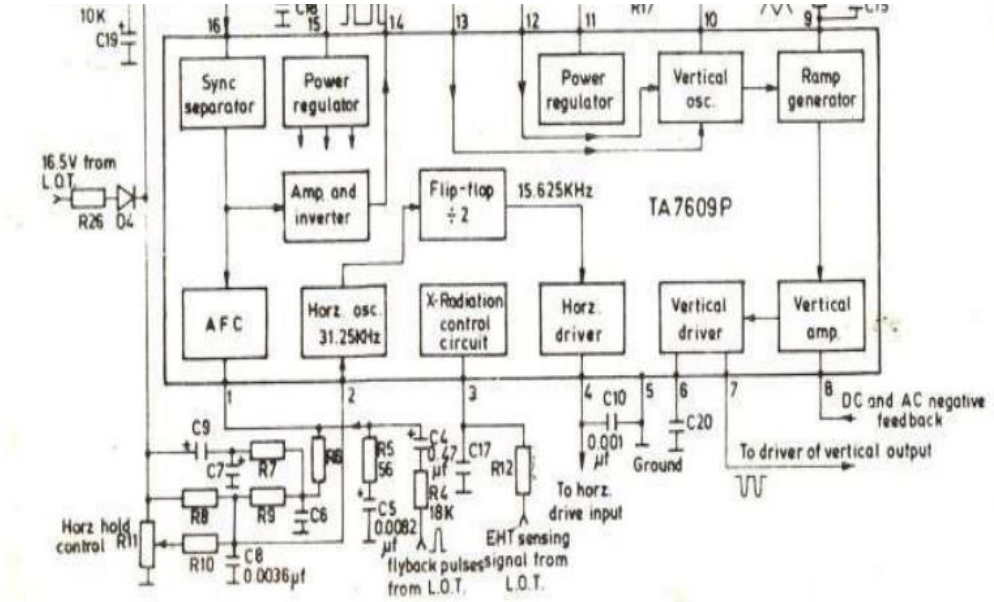 	4M Diagram
	c)	State the 2 advantages and 2 disadvantages of remote control system	4M
	Ans:	**Advantages:** • Audio muting option is available. • TV can be programmed by remote control system. • User can make their own set of selected channels. **Disadvantages:** • It requires line of site. • Range of IR sensor is less compared to any other wireless communication components. • Latest TV do not have power on/OFF button on the TV so if remote is faulty TV cannot be stay off condition means it goes in standby mode which ultimately cause loss of power.	2M for any 2 Advantages 2M for any 2 Disadvantages

	d)	Draw construction of SAW filter and describe its working	4M
		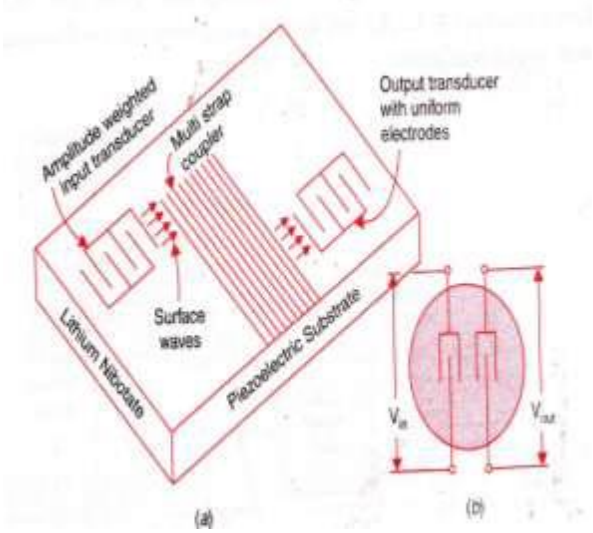 OR 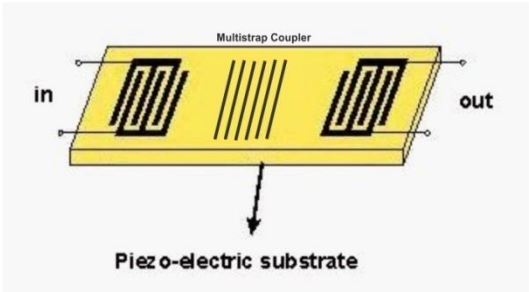 • The Operation of the SAW filter is based on phenomenon of surface acoustic waves. A Surface Acoustic Wave is a non electromagnetic Wave that travels along the surface of a piezoelectric substrate. The Substrate undergoes physical stress when an electric potential is applied across it. Similarly, when such a material is subjected to any physical stress a proportionate electric potential is developed. • The Transducer are provided at 2 ends of the piezoelectric wafer to convert electric energy to acoustic wave energy and then back to electric energy.	2M Diagram 2M Explanation
	B)	Attempt any one.	6-Total Marks

	a)	**Draw ckt. of reference oscillator and describe its working**	6M
	Ans:	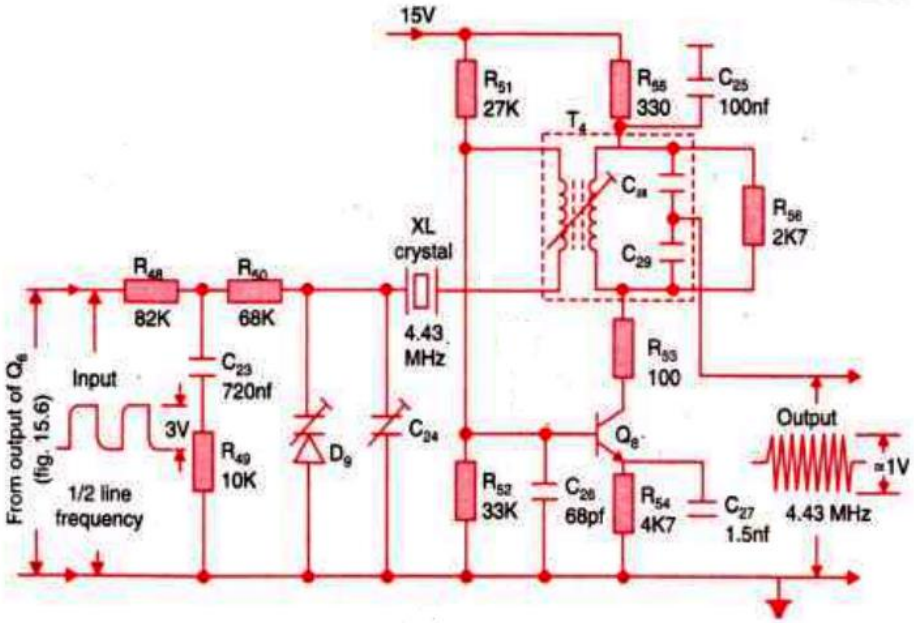 • The U & V signals are separately produced at the transmitting end by what is known as double balanced suppressed carrier modulator. Thus it is necessary to regenerate the subcarrier in the receiver to affect demodulation of colour difference signals. The reference Oscillator generates a output at 4.43MHz as shown in fig. • The Oscillator circuit is formed by transistor Q and the +ve feedback which occurs between its collector and base electrode through the tuned transformer. The Frequency is determined by the center-resonant frequency of the crystal. **<u>Frequency Control Input:</u>** • The Nearly square waveform is fed to the varicap diode of the Reference oscillator through an integrating network formed by resistor & Capacitor. This smoothens out the 7.8KHz and produces at the junction of both Resistors R48 & R50. DC voltage whose value is proportional to the mean level of the waveform. • When frequency and phase of the reference oscillator are correct, the +Ve and -Ve half cycle of the square wave become symmetrical and its mean value being zero does not add or subtract to the DC voltage set by the APC bias control. This then causes the correct reverse bias voltage across diode & hence necessary capacitance value for an output frequency of 4.43MHz • The frequency of output Resistance for some reason become too high, The mean value of I/P control waveform will drop to lower the reverse bias voltage across diode. This will result in an increase in the varicap capacitance which in turn causes the output frequency to fall by an amount which will eventually compensate for the unwanted increase. • In the same way a reduction in the frequency of output resistor causes an increase in the reverse bias across diode. This turn causes an increase in the reverse current flow in the varicap diode and a reduction in its effective capacitance. The end result is an increase in the output frequency to make up for the unwanted reduction.	3M Diagram 3M Explanation

	b)	Draw construction of trinitron colour picture tube and describe its working.	6M
	Ans:	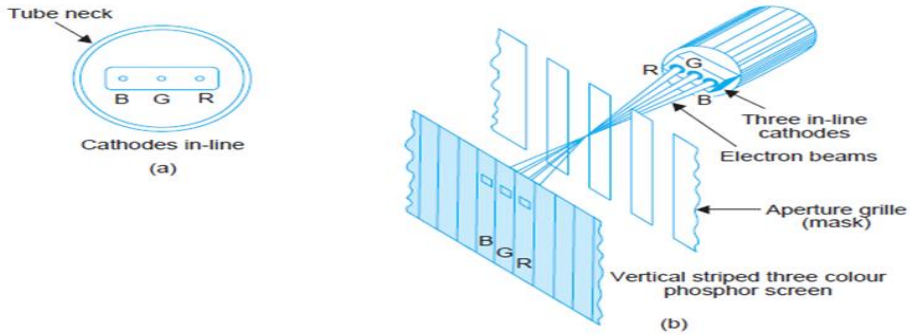 • The Trinitron or three in-line cathodes colour picture tube was developed by 'SONY' Corporation of Japan around 1970. It employs a single gun having three in-line cathodes. This simplifies constructional problems since only one electron gun assembly is to be accommodated. • The three phosphor triads are arranged in vertical strips as in the P.I.L. tube. Each strip is only a few thousandth of a centimeter wide. A metal aperture grille like mask is provided very close to the screen. • It has one vertical slot for each phosphor triad. The grill is easy to manufacture and has greater electron transparency as compared to both delta-gun and P.I.L. tubes. The beam and mask structure, together with constructional and focusing details of the Trinitron are shown in Fig. • The three beams are bent by an electrostatic lens system and appear to emerge from the same point in the lens assembly. Since the beams have a common focus plane a sharper image is obtained with good focus over the entire picture area. All this simplifies convergence problems and fewer adjustments are necessary.	3M Diagram 3M working
Q. 2		Attempt any FOUR	16-Total Marks
	a)	State the merits and demerits of forward SMPS	4M
	Ans:	Note: Any other relevent Points can be considered. **Advantages:** • Simple Circuit • Less Cost • Higher Efficiency • The main advantage of the forward SMPS is greater efficiency than linear regulators because the switching transistor dissolves little power when working as a switch. **Disadvantages:** • Disadvantages of SMPS include the generation of high-amplitude,	2M for any 2 Advantages 2M for any 2 Disadvantages

		• The high-frequency energy that the LPF must block to avoid EMI (electromagnetic interference), • Harmonic frequencies, • Ripple voltage at the switching frequency.	
	b)	Draw construction of chroma delay line and describe its working	4M
	Ans:	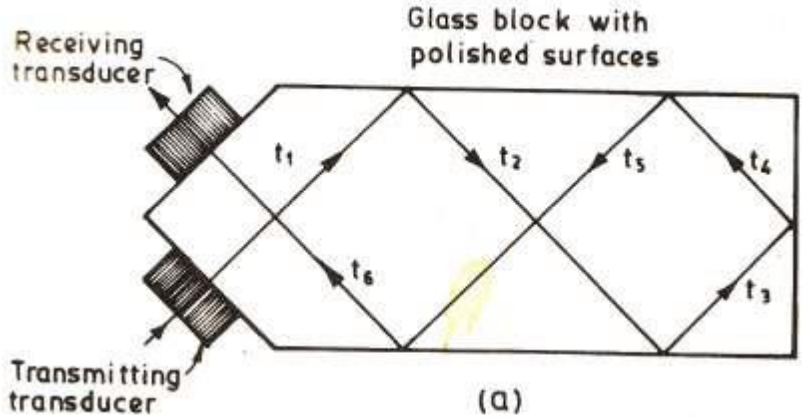 (a) **Working:-** • It consists of a block of special glass (Isopaustic) fitted with two ultrasonic transducers. One transducer function to convert electrical signal into an ultrasonic signal whose mean frequency & amplitude variations are identical to those of the electrical signal while the other converts that the ultrasonic signal into electrical form at the same frequency. • The electrical signal from the chroma amplifier with a mean frequency of 4.43MHz is coupled into the transmitting transducers where it is converted into an equivalent ultrasonic signal having the same mean frequency & pattern of amplitude variations. The signal travels through the glass block in a multiple path due to reaction from the polished surface before it reaches the receiving transducer. • In the figure it is converted back into the original electrical form but delayed in time with respect to the signal at the input of transmitting transducer. • The delay of signal is caused by low velocity of the ultrasonic signal as it passes through glass of the delay line. This is typically 3mm per μs as compared to the hundreds of thousands of mm per μs transferred by an electrical signal passing along a length of wire.	**2 marks Diagram** **2 marks explanation**
	c)	Draw block diagram of push-pull SMPS and describe its working	4M

	Ans:	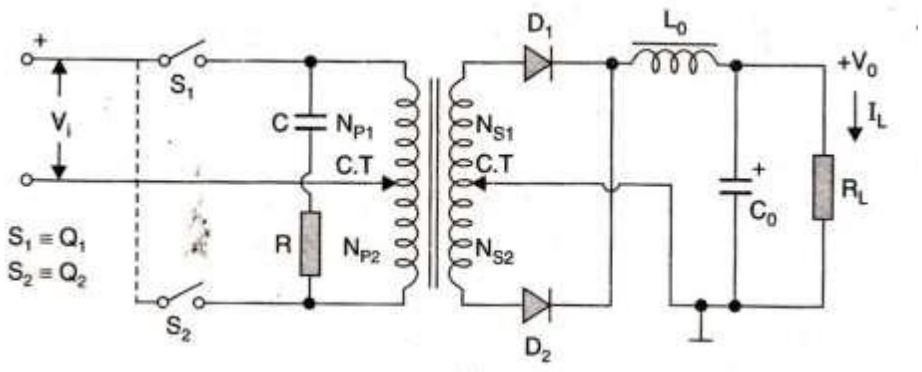 **Explanation:** • **Switches S1 and S2** represents two transistors that are necessary for transfer of energy from unregulated source Vi to the load circuit. The two transistor conduct alternately by opposite polarity pulses from the pulse width modulator. • Thus **D1 and D2 conduct alternately** as in a conventional full-wave rectifier circuit. • The **choke L_0** and filter **capacitor C_0** store energy to maintain steady voltage across the load. The **feedback circuit** operates in the same manner to actuate the PWM in such a way that conduction periods of switching transistors vary in accordance with variation in load current thus maintains output voltage constant at V_0.	**2M Diagram** **2M Working**
	d)	Explain the role of microcontroller in TV receiver	4M
	Ans:	**Explanation:** The main thrust of all microcontroller is based control system is channel selection and fine tuning. For this, frequency synthesizer is used which enables crystal accuracy of the local oscillator frequency for all channels. Several facilities that become available in microcontroller controlled system include. • Auto seek programming • Manual programming • Digital 'LED' display of the selected channel • Operation with or without remote control • AFT control and • Audio mute during channel hunting. • For above reasons microcontroller in TV receiver is used.	4M
	e)	State the features and control available in plasma TV	4M
		Controls available in plasma TV (Any 4) i. Change viewing modes ii. Use picture-in-picture (PIP) mode iii. Use picture-on-picture (POP) mode iv. Change plasma TV tuner settings v. Set the sleep timer vi. Adjust sound controls vii. Use the V-Chip (Parental Guide) controls viii. Adjust the picture ix. Change on-screen display (OSD) settings x. View signal frequency information	2M

		Features of plasma TV: (Any 4) • There is no flicker as all the phosphor excited pixels react at the same time during one frame of scanning. • There is also no back light and no protection of any kind. • As , such the light emitting phosphors result in bright pictures with rich colors and wide viewing angle. • Though plasma screens are thin, they are heavy and consume lot of power. • These are also fragile and often need professional help to install them. • Capable of producing deeper blacks allowing for superior contrast ratio. • Wider viewing angles than those of LCD. • Less visible motion blur. • Superior uniformity. • Unaffected by clouding from the polishing process. • Less expensive for the buyer per square inch than LCD	2M
	f)	Draw block diagram of remote control transmitter and state function of each block	4M
	Ans:	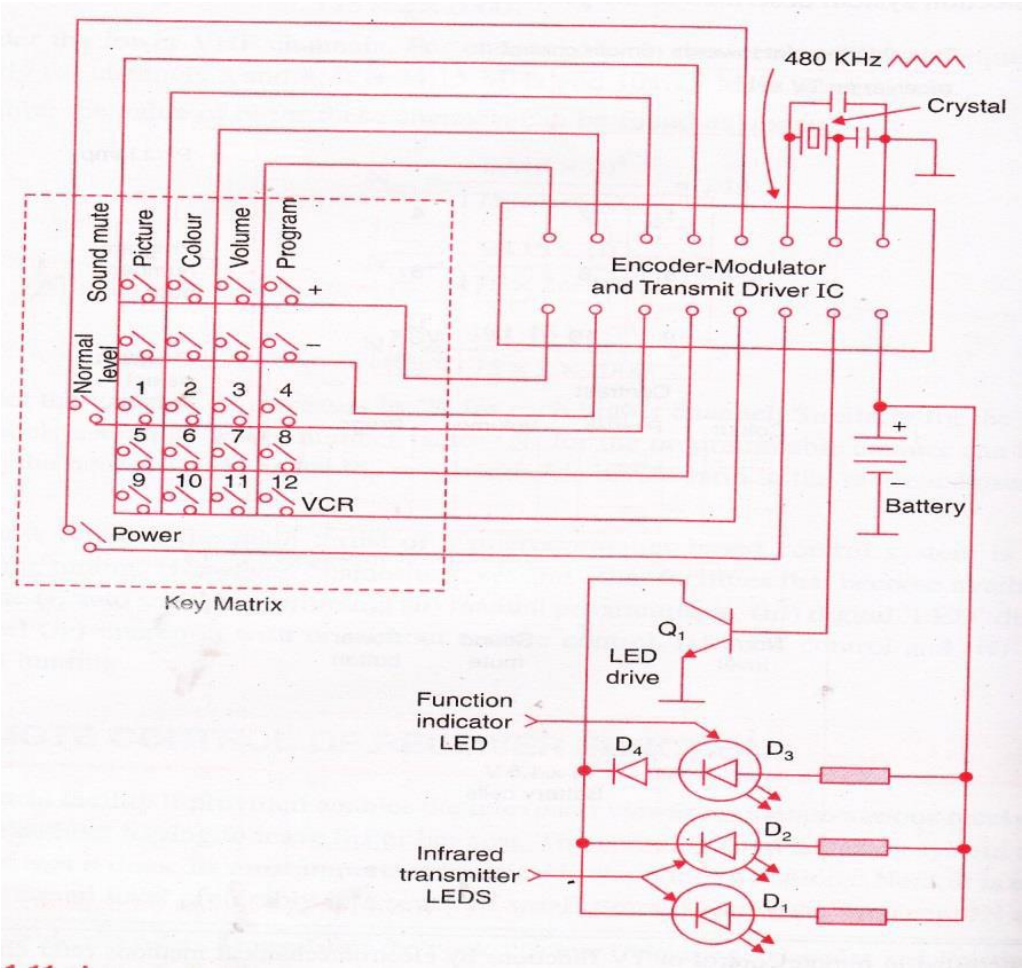	2M Diagram 2M Explanation

Explanation:-

- The pulse output (high or low) on depression of any one key button activates special individual circuitry in the encoder.
- It produces a distinctive pulse train which modulates the crystal controlled 48 KHz carrier. After due amplification it is fed to the LED driver which passes proportionate current pulses through the two LEDS, D1 and D2,.
- The emission of radiation in the infrared region causes transmission of the modulated wave towards the remote controlled receiver when the unit is aimed at it.
- In addition, the modulated 48 KHz output from Q1 is rectified by D4 and lights the function indicator LED (D3) located on right hand top of the transmitter panel. This LED shows that a function button has been depressed.
- If it fails to light, it indicate that the battery needs replacement.

Q. 3	A)	Attempt any FOUR	16-Total Marks
	a)	Describe diode split technique for the generation of EHT voltage	4M
	Ans:	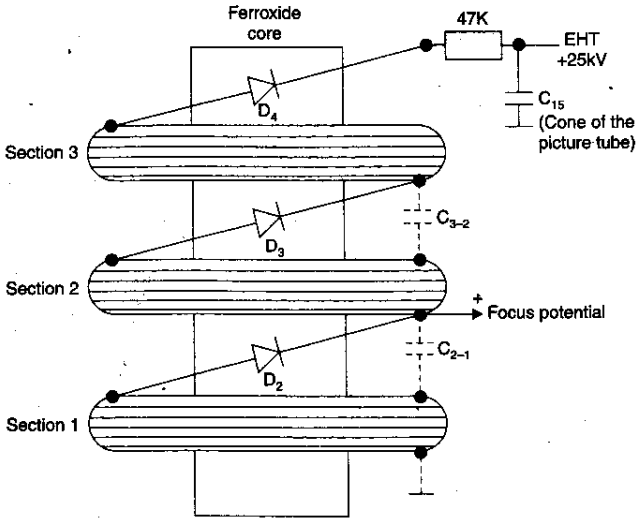	2M Diagram 2M Explanation

Explanation:-

- The Diode split technique is three layer secondary windings are shown wound round the ferroxide core of the L.O.T While the three section are shown separately, in actual practice these are wound one above the other and are thus concentric. Each winding is identical to the other and has the same number of turns.
- The same magnitude of voltage will therefore be induces in each section every time the flyback derived input pulse gets applied to the primary winding .
- Because of the close proximity of individual layers, an inter-layer capacitance exists between each of them. It is indicated in the diagram by capacitors in dotted – chain form because these are no physical capacitors. If a diode is

		connected between the end of the layer of winding and the start of the next, the ac voltages induced in each layer can be made to charge up all the inter-layer capacitances to the same voltage. • Since the capacitances are effectively in series, the total voltage, appearing at the output terminal is the sum of all the voltages appearing across all of them. • The diodes shown connected in series between the layers are physically embedded in the winding and form an integral part of the transformer. • The three winding are so designed that voltage induced in each layer form the flyback transformer in 8.33KV. This makes the total potential equal to 25KV and forms the EHT supply source.	
	b)	Draw block diagram of remote control receiver and state function of each block	4M
	Ans:	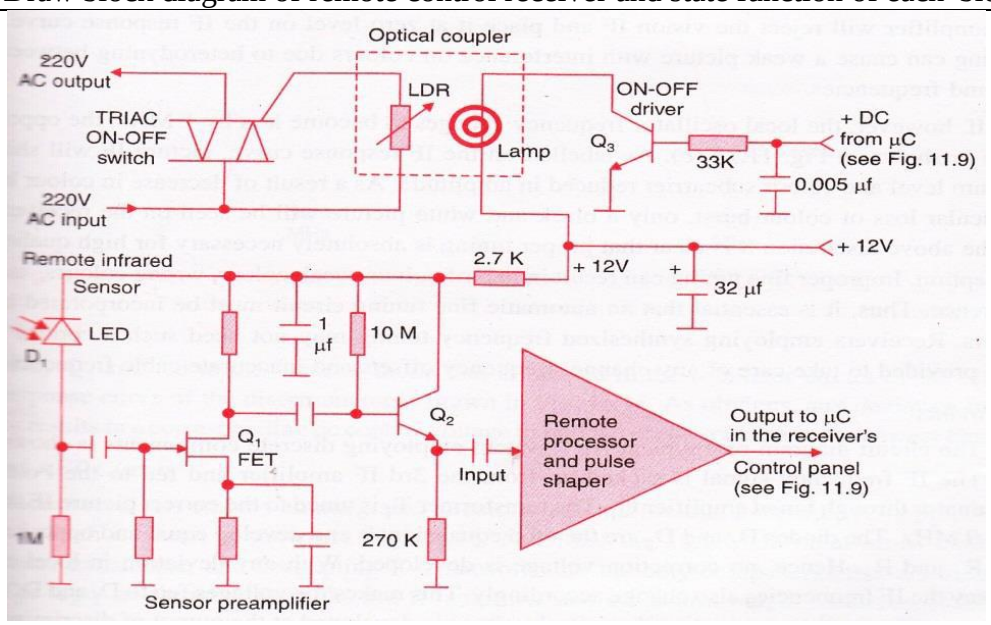 • A Schematic diagram of the remote control receiver is shown in fig. The pulse modulated infrared signals from the remote infrared transmitter are picked up by the remote infrared sensor D1. • The picked up ac signal feeds into Q1,an FET amplifier, for some amplification. It is then coupled to the remote processor and pulse shaper via emitter follower Q2. • The modulated signals are further amplified and then demodulated. The recovered pulse train then feeds into the pulse shaper which is designed to generate pulse patterns (ramps, high, low etc.). • Each pattern is different and corresponds to the function button pressed on the remote control unit. The shaped individual pulse pattern is then dc coupled to the microcomputer.	2M Diagram 2M Explanation

		• The microcontroller on receipt of different inputs produces appropriate output to perform the ordered functions.	
	c)	Draw schematic diagram of IC 1190 and state its function	4M
	Ans:	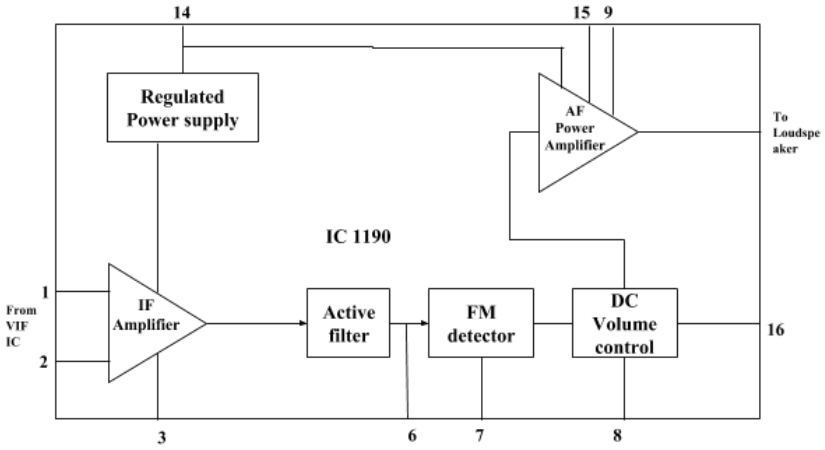 **Input Circuit:** The sync. Video detector in the VIF IC detects both video and intercarrier SIF signals. This signal fed to the sound system IC through an independence matching and filtering network. The signal that feeds at pin1 has 3dB bandwidth of about 150 KHz centered around 5.5MHz. **Regulated Power Supply:** A unique feature of the sound IC is their centrally regulated DC supply. The voltage regulator that feed independent DC voltage to the IF amplifier, FM detector, pre amplifier, DC voltage control. The audio amplifier section are fed directly from the 24V DC source. **IF amplifier limiter:** The FM SIF signal as it enters the sound IC is quite weak and has some amplitude variation due to noise pulse and somewhat unequal amplification at the RF and IF stages of receiver. Therefore this stage is designed to provide large gain and remove amplitude variation by limiting. **Active Filter:** The filter removes all harmonics caused by limiting action of the preceding IF amplifier section and feeds a sine wave SIF signal to the demodulator with side bands not exceeding beyond about ±100KHz of 5.5MHz. **FM detector:** In this system a new technique known as differential peak detector is used to develop audio voltage from the frequency modulated signal **AF amplifier:** The FM detector output feeds into the pre amplifier which is of the complementary symmetry type. The speaker is connected at the junction of emitter and collector of the 2 output transistor through a large electrolytic capacitor.	2M Diagram 2M Explanation
	d)	Draw circuit diagram of Ident and colour killer ckt. and describe its working	4M

Ans:

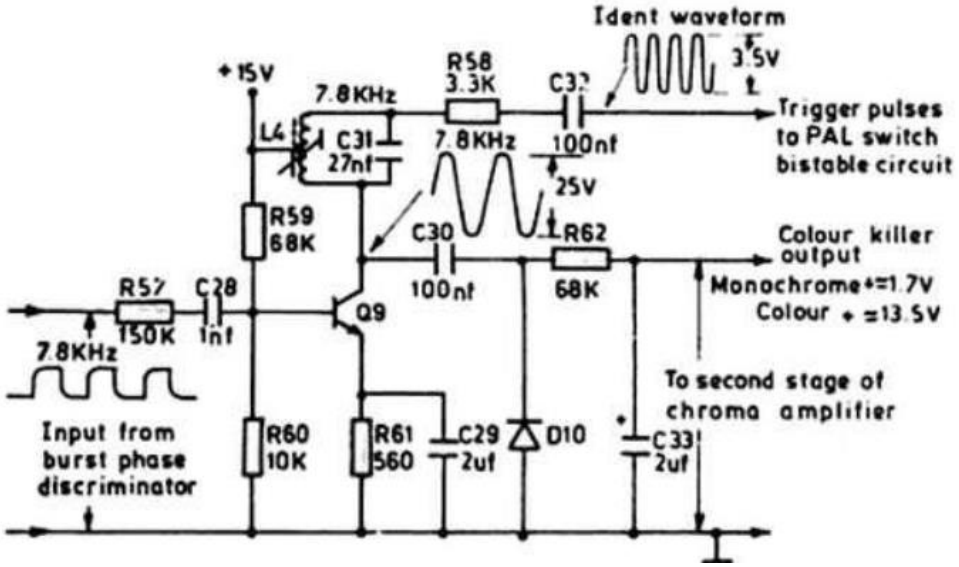

2M Diagram

2M Explanation

Explanation:-

- The dc operating voltage to Q9 is supplied via center tap on L4. Such a connection causes L4 to function as a tuned autotransformer & enables a waveform of about 25V peak-to-peak to be developed at the collector of Q9.
- This is fed via C30 to diode D10 which functions as a HWR. The components R62 & c33 form a LPF which provides a steady dc level of about 13.5V as the output. This is the color killer voltage which is used to control conduction of the second stage of Chroma signal amplifier.
- When a black and white picture is being received, there is no output from the burst discriminator & hence, no input to burst phase indent amplifier.
- Under this condition the color killer output fails to less than 2V which is not enough to forward bias transistor of the Chroma amplifier. Thus the second Chroma amplifier stage is inhibited.
- This prevents application of any signal to the Chroma delay line & to the U & V demodulators. Thus any stray coloring signals are prevented from reaching RGB amplifier & hence, no colour noise appears on the black & white picture during monochrome receptions.

e) Compare plasma and LCD display technology — 4M

Ans:

Parameter	Plasma Display	LCD Display
Brightness	Very poor in direct sunlight without reflective design (battery powered devices)	Some panels are highly reflective, should be used in a dark environment for optimum picture quality
Contrast	Over 1,000:1	Over 20,000:1
Color	Good on most newer models	Excellent
Ghosting & Smearing	Display motion blur on models with slow response time, and the elimination technique (strobing	None even during fast motion, advancements in 3D have eliminated phosphor trailing due to

1M Each Point (Any 4 Points)

		backlight) can cause eye-strain	the use of fast switching phosphors	
		Response Time	1–8 ms typical (according to manufacturer data), older units could be as slow as 35 ms	Sub-millisecond
		Environmental influences	Low temperatures can cause slow response, high temperatures can cause poor contrast	High altitude pressure difference may cause poor function or buzzing noises
		Aging	Yes	Yes
		Weight	Light	Heavy, however, less weight gain per size increase

Q.4	A)	Attempt any three	Total Marks 12
	a)	Describe stereoscopic effect with the aid of special glasses in a 3D TV	4M
	Ans:	In this method to slightly offset images are produced on the screen One image is tinted in red and The other in cyan The Viewer wears A class with a filter of Red on one lens and a Filter op cyan On the order lens. The Red filter allows red tinted image to one eye, Say left Eye and The Cyan filter allows the cyan tinted Image to the other eye, Say right Eye. This way, the two eyes Receive separate images Of the same object. Then the brain process the two images to produce a 3-D effect. Methods 1. Anaglyph Method: In this method to slightly offset images are produced on the screen One image is tinted in red and The other in cyan The Viewer wears A class with a filter of Red on one lens and a Filter op cyan On the order lens. The Red filter allows red tinted image to one eye, Say left Eye and The Cyan filter allows the cyan tinted Image to the other eye, Say right Eye. This way, the two eyes Receive separate images Of the same object. Then the brain process the two images to produce a 3-D effect. 2. Polarization Method: Two offset images of the same object on a TV screen are polarized differently, one using horizontal polarization and the other, vertical polarization. The viewer wears polarized glasses of appropriate polarization for the eye. If the glass of the left eye is of horizontal polarization, then that of the right eye will be of vertical polarization. Thus the left eye will allow that image which is horizontally polarized, and the right eye will allow only vertically polarized image to reach the respective retina \. 3. Shutter glasses Method: There are two active glasses that shut up alternately. When and image meant	4M Explanation

		For the left eye comes ,The glass of the left eye is open and that of the right is closed. For the right eye, the left eye is closed and the right eye open's. The glasses open and close like shutters, hence the same. This two images are formed alternatively, One in the field of the left eye and another in the field of the right eye at the rate of 50 field per second	
	b)	State the requirement of AGC and AFT ckt. in TV receiver	4M
	Ans:	Requirement of AGC: • Automatic Gain Control (AGC) circuit varies the gain of a receiver according to the strength of the signal picked up by antenna. • Useful signal strength at the receiver input terminals may vary from 50μV to 0.1V or more, depending on the channel being received and distance between transmitter and receiver. • The AGC bias is a DC voltage proportional to the input signal strength. It is obtained by rectifying the video signal as available after the video detector. • The AGC bias is used to control the gain of RF and IF stages in the receiver to keep the output at the video detector almost constant despite changes in the input signal to the tuner. Requirement of AFT: The AFT circuit is actually automatic frequency control (AFC) on the local oscillator in the tuner. This control aims at obtaining a picture of IF frequency of exactly 38.9MHz at the converter output. To achieve this, the IF frequency is obtained from the IF amplifier section is measured by a discriminator that forms part of the AFT control circuit	2M Need of AGC 2M need of AFT
	c)	Describe Auto stereoscope technique to create a 3D effect	4M
	Ans:	Explanation:- Note: Any one method is to be considered i) Lenticular Method:- Diagram:- 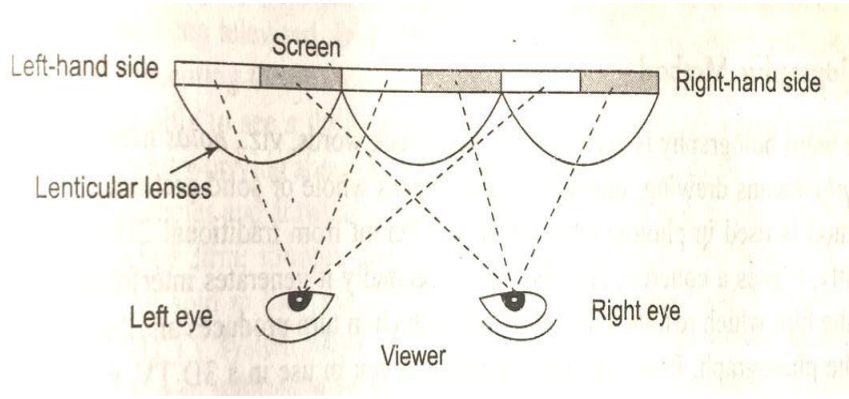 **Explanation:-** Lenticular lenses are cylindrical plastic glasses that are pasted in an array on a transparent sheet. • Thus sheet is struck on the screen of an LCD TV. The cylindrical lenses magnify the image to the viewer and convert the plain image into a cylindrical image. • Now, without wearing any special glasses,	2M Diagram 2M Explanation.

the viewer's two eyes will see two slightly different images. The left eye will see a bit more of the display on the extreme left hand side, and the right eye will see a little more on the extreme right – hand side as shown in fig.

This method gives a good quality 3D view of the image; the view is greatly dependent on the position when the viewer is sitting.

OR

ii)Parallax Barrier:-

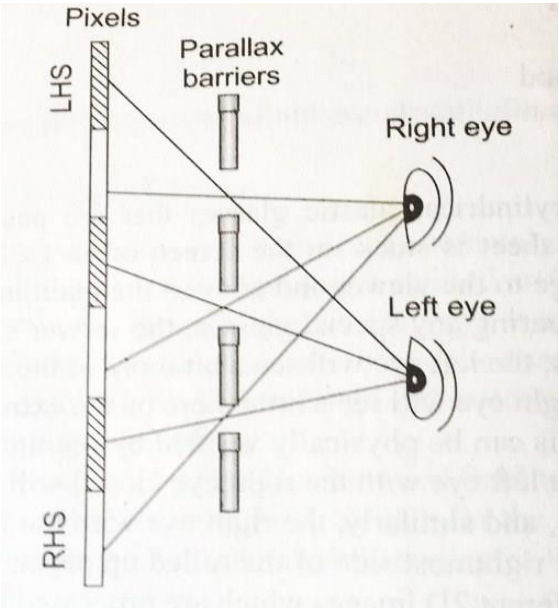

- The Parallax barrier is a fine grating of liquid crystal with slits in it. When placed over a screen, the slits corresponds to certain column of pixels on the TV"s screen.
- When a small voltage is applied to the parallax barrier, the slitted grating allows two slightly different images to reach the left and the right eye, as shown in the fig. the brain processes these two images to produce 3D images.
- The parallax barrier can be switched on and off easily, allowing the TV to be used as a traditional 2D or A new 3D set. While it offers good quality contents, it is sensitive to the position of the viewer, resulting in well-defined sweet spot . This aspect hampers its general acceptability

OR

iii) Holographic Method:-

		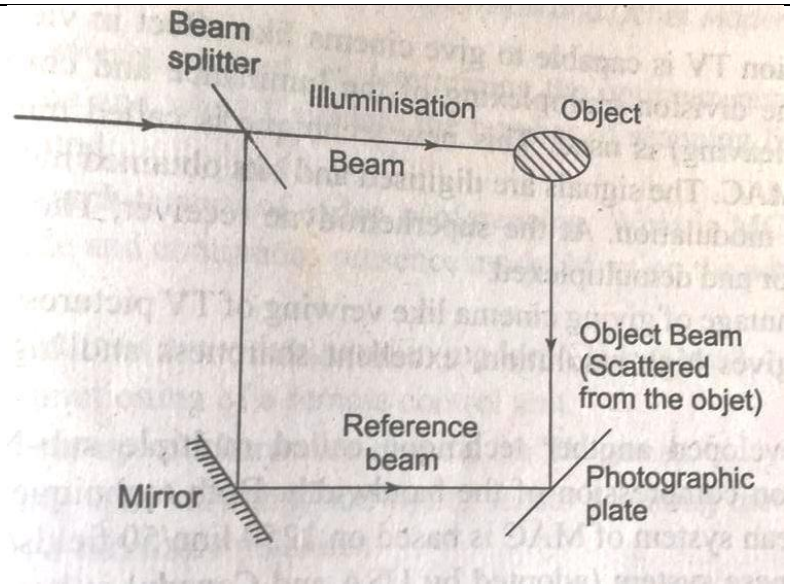 A laser beam from a suitable source, say an LED is split into two beams by a prism or a special mirror one beam goes to the object and is scattered from innumerable points of the object and reaches the film. • The other beam from the splitter goes directly to the film without encountering the object. This is called "reference beam." • As all the points of the object are not equidistant from the film, the scattered beam coming from non-equidistant point will have phase difference with respect to the reference beam from some point it would be in phase while from some other points out of phase. • The phase, and weakening when they meet in an opposite phase. The interference pattern so obtained will produce the effect of depth. This is how holograms are prepared • In case of TV, a 3D image will be registered on the surface of the target plate of the TV Camera by using holographic techniques. • When this image is transmitted and reproduced on the display panel of the Tv receiver, it would be the hologram of the scene which this image is transmitted and reproduced on the display panel of the TV receiver, it would be the hologram of the scene which had been televised	
	d)	Draw vertical output amplifier cut. and describe its working	4M
	Ans:	Diagram:	2M Diagram 2M Explanation

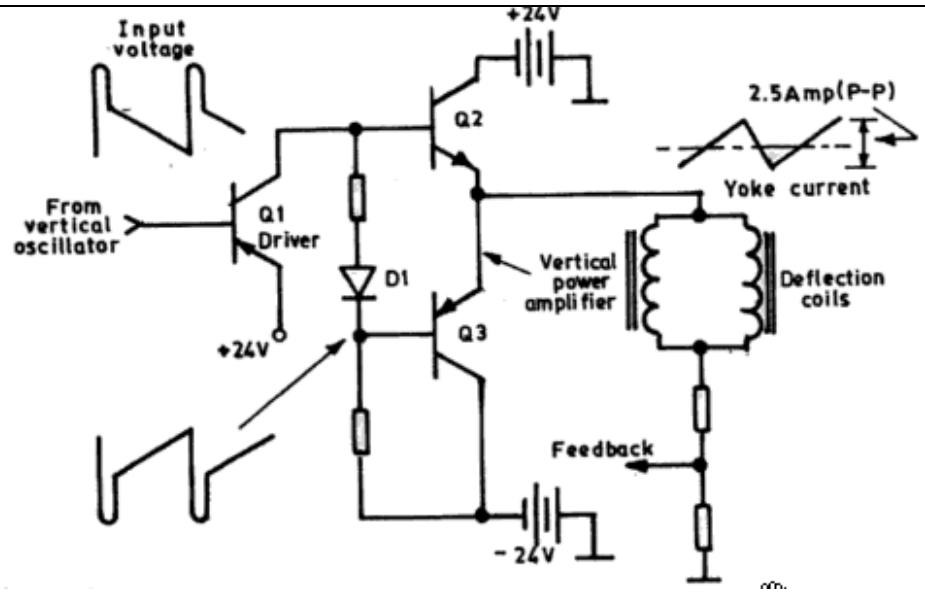

Working:

- The output transistor Q2 and Q3 operate under class „B" and are alternately driven in to conduction by a common trapezoidal input signal.
- When Q2 is ON and Q3 is OFF, current flows through the yoke from the positive 24V supply. On the alternate half of the input signal when Q3 is ON and Q2 is OFF, current flows in the opposite direction from the negative 24V supply.
- This amounts to an AC current flow through yoke. Diode D1 is forward biased and voltage drop across it provides suitable bias to Q2 and Q3 thereby preventing any crossover distortion.
- The conduction of diode D1 also ties the bases of Q2 and Q3 allowing signal output from the driver Q1 to feed both of them simultaneously

	B	Attempt any one	Total Marks 6
	a)	Draw schematic diagram of VIF IC and describe its working	6M

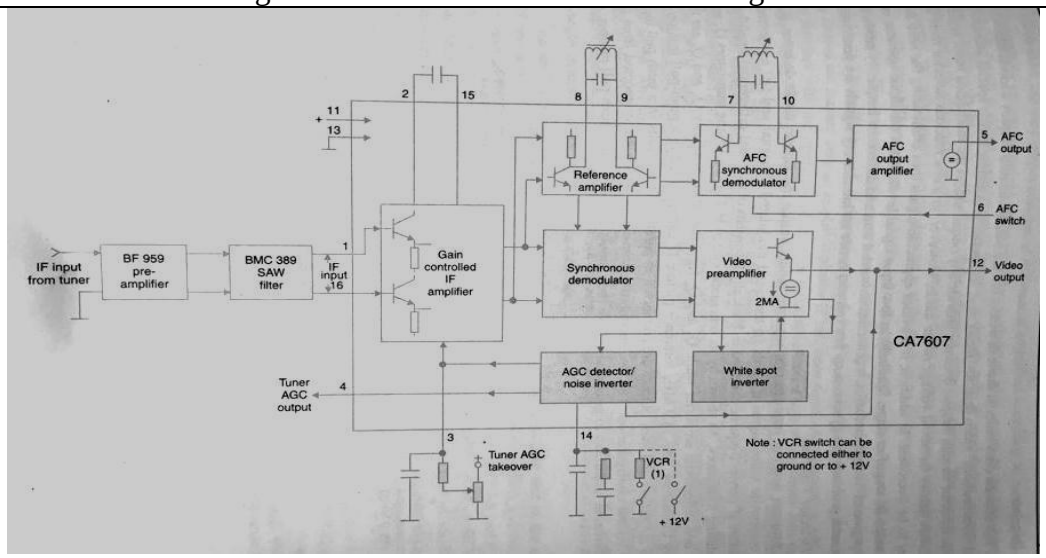

3M Diagram

3M Explanation.

Explanation:

- Gain Control of IF amplifier: The gain control of IF amplifier is a cascade of 3

stage wide band amplifier. It amplifies IF output received from the SAW filter to a suitable level. The maximum overall gain of the IF amplifier is kept about 60dB to obtain sensitivity of 100mV at 38.9 MHz. The gain of IF amplifier is controlled by the AGC controlled voltage which is applied to the 3rd stage of IF amplifier.

- Synchronous Demodulator: A synchronous demodulator is used for detecting composite video signal. It requires a dual modulated IF signal and a reference signal for detection. It consists of 2 dual differential amplifiers and 2 modulated transistors that work in push pull configuration to detect video signal output.
- Video Pre- Amplifier: The video pre-amplifier with noise cancellation circuit is used as a buffer stage for impedance matching and feeding of signal to the succeeding stages. The bandwidth of this amplifier is slightly greater than 5MHz.
- White spot inverter: White spots on the screen are caused by excessive current due to over modulated signal. This circuit faithfully detects the noise signal and plans them to safe amplitude.
- AGC detector & noise inverter: AGC circuit generates control voltage to limit the video signal amplitude during both positive and negative noise spikes and when the voltage of the signal is low. The noise inverter circuit cancels the noise signal by adding inverted noise pulses detected by white spot inverter.

b) Draw circuit diagram of ACC amplifier and describe its working — 6m

3M Diagram 3M Explanation

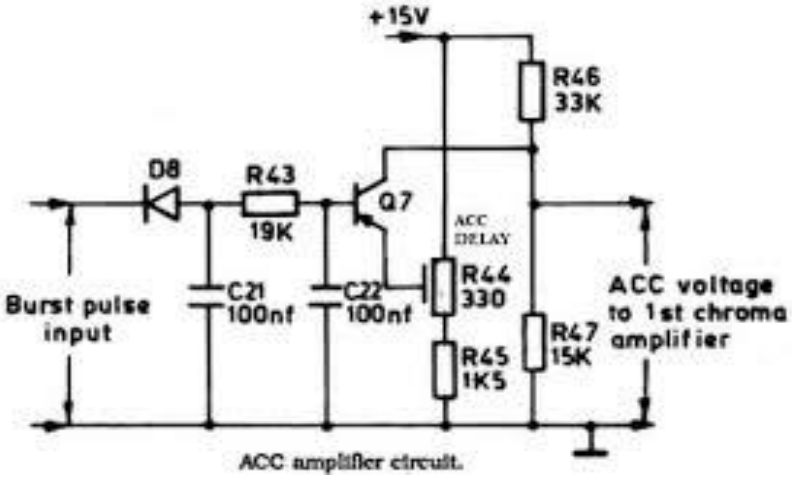

ACC amplifier circuit.

- The amplified burst signal that become available at the output of gated burst amplifier is also fed to diode D8 of the automatic colour control amplifier circuit as shown in fig.
- The diode together with filter (C21, R43, and C22) acts as a HWR-cum-filter to develop a negative going dc voltage at the base of Q7, which is proportional to the strength of received signal.
- As stated C21, R43 & C22 from a LPF to smooth any 4.43MHz variations present in the rectified signal. The output voltage at the collector of transistor Q7 is a positive voltage which increases or decreases with the strength of Chroma signal.
- This positive voltage is typically 7V under normal signal strength conditions. The resistor R44 provides an adjustable reverse bias for Q7 to delay its conduction until the Chroma signal exceeds a given threshold.
- The potentiometer formed by resistors R46 & R47 is used to obtain correct steady bias for the first Chroma amplifier. It is also necessary for making the collector of transistor Q7, negative w.r.t. its emitter.

Q.5		Attempt any Two	Total Marks 16
	a)	Draw block diagram of colour TV receiver and describe the function of sweep section	8M
	Ans:	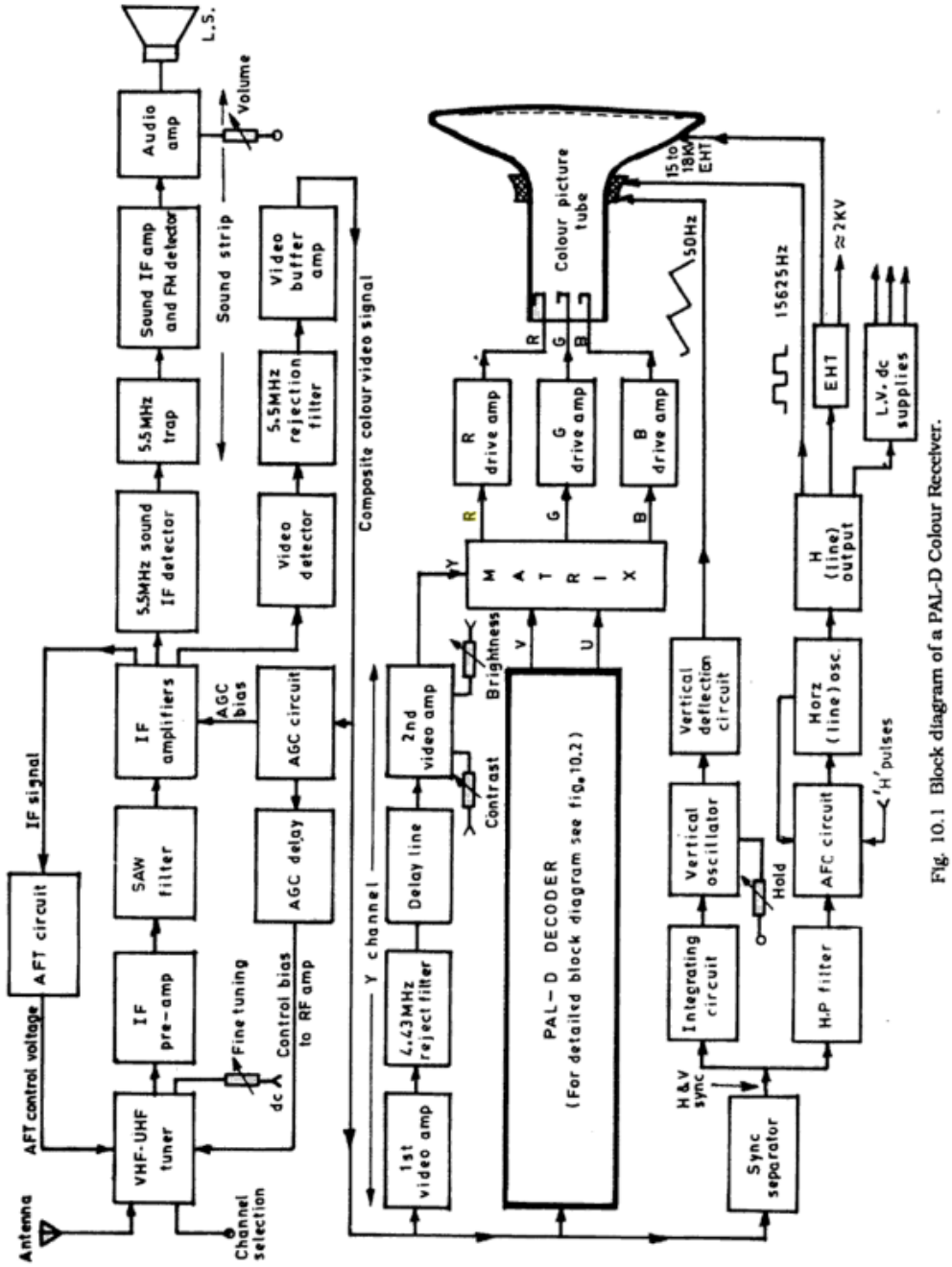 Fig. 10.1 Block diagram of a PAL-D Colour Receiver. Explanation:- • The synchronizing pulses generally called „sync" are part of the composite video signal as the top 25 percent of the signal amplitude. • The sync pulses include horizontal, vertical and equalizing pulses. There are separated from the video signal by the sync separator. • The clipped line (horizontal) and field (vertical) pulses are processed by appropriate line pulse and field pulse circuitry. The sync output thus obtained is fed to the horizontal and vertical deflection oscillators to time the scanning frequencies.	6M Diagram 2M Explanation

		• As a result, picture information is in correct position on the raster. The sequence of operations is illustrated in Fig. by a block schematic diagram.	
	b)	Draw horizontal output amplifier circuit and describe its working	8M
	Ans:	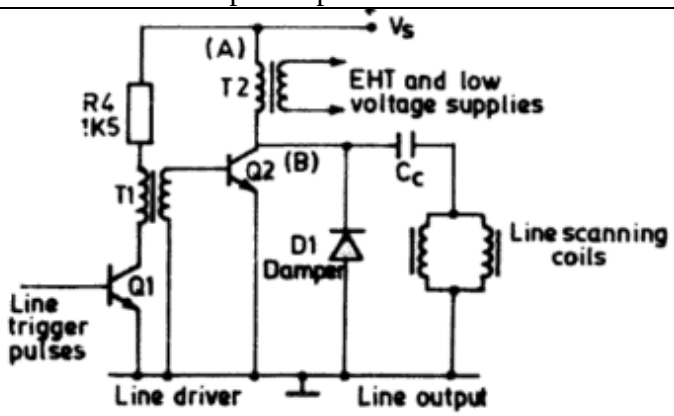 Working :- • The principle of diode spilt addition is illustrated in fig where three layers of secondary winding are shown wound round the feroxide core of LOT while the three sections are shown separately. In actual practice, these are wound one above the other and are thus concentric. Each winding is identical to other and has the same no of turns. • The same magnitude of voltage will be induced in each section every time the fly back derived input pules gets applied to primary winding. • Because of close proximity of individual layers and interlayer capacitance exist between each of them . • It is indicated in the diagram by capacitor in dotted chain form become these are not physical capacitor of a diode is connected between the end of layers of winding and start of the next the Ac voltage induced in each layers can be made to change. • Up all the interlayer capacitance to the same voltage since the capacitance are effectively in series. • The total voltage appearing at the output terminal is the sum of all voltage appearing across all of them. • The diode shown connected in series between the layers are physically embedded in winding from an interlayer part of Transformer The three winding are so designed that voltage induced in each layer form the fly back Transformer is 8.33 Kv. • This makes total potential equal to 25Kv and forms the EHT supply source.	4M Diagram 4M Explanation
	c)	Draw block diagram of PAL-decoder and state the function of each block	8M

	Ans:	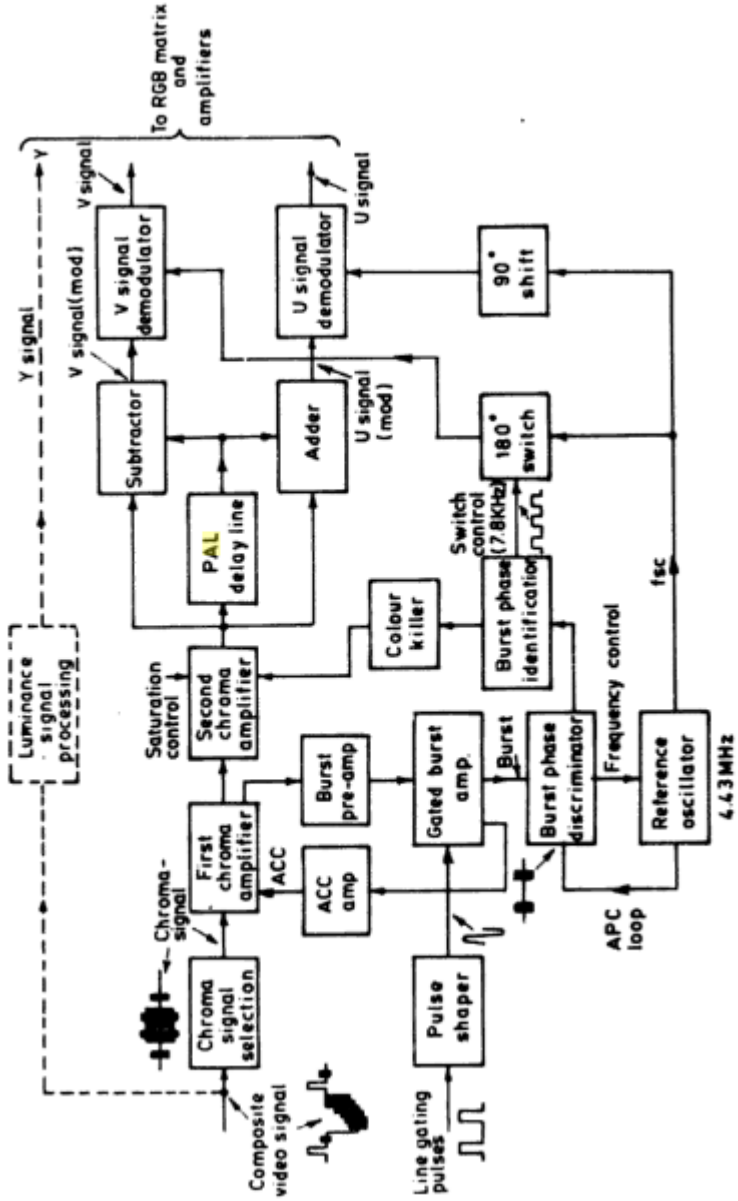 Explanation:- • Chroma signal selection: • Its function is to select Chroma and colour burst signal from the incoming CCVS signal. It essentially consist of band pass circuit whose center frequency is chosen to be equal to that of Chroma sub-carrier itself i.e.4.43MHz. • 1st Chroma amplifier: The Chroma and burst signals are amplified by first Chroma amplifier which is controlled by DC voltage developed by the Automatic Chroma Control (ACC) amplifier. 2nd • Chroma amplifier: The second Chroma amplifier incorporates colour saturation control circuit. The output of colour killer also feeds into it. • PAL delay line (separation of U and V colour phasors): This network separated U and V signals with are then fed to respective	4M Diagram 4M Explanation

		demodulator. • Gated burst amplifier: The gated burst amplifier separates the burst pulses and amplifies them a level suitable to operate the burst phase discriminator. • Automatic Chroma Control (ACC): The magnitude of the voltage so fed back is proportional to the magnitude of the burst and therefore to the amplitude of Chroma signal itself. This voltage is used to control the first stage of Chroma amplifier in such way to ensure constant Chroma signal amplitude. • Burst phase discriminator: It is sensitive to burst pulses and is designed to detect any differences which might exist between the phase of burst pulse and that of the reference oscillator. It produces at its output a dc voltage whose magnitude and polarity are proportional to the magnitude and direction of the detected phase difference. • Burst phase identifier: This circuit is able to identify the phase relationship of the colour burst. 180º switch: This switch is used to periodically invert the waveform fed to the v-signal demodulator. • Colour killer control: This is just a half wave rectifier which produces a steady dc potential from the succession of burst pulses. During black and white transmission the dc potential is absent and hence biases the 2nd Chroma amplifier to cut off state.	
Q6		Attempt any four.	Total Marks 16
	a)	State the advantages of SAW filter	4M
	Ans.	Note: Any other advantages can be considered. Advantages of *SAW Filter* 1. compact packages 2. Light in weight 3. superior linear phase characteristics and rejection qualities 4. stable performance over temperatures. 5. robust and reliable designs that remain stable in the field/application. Additionally	1M each.
	b)	Describe the basic principle of formation of picture pixels in plasma TV	4M

	Ans.	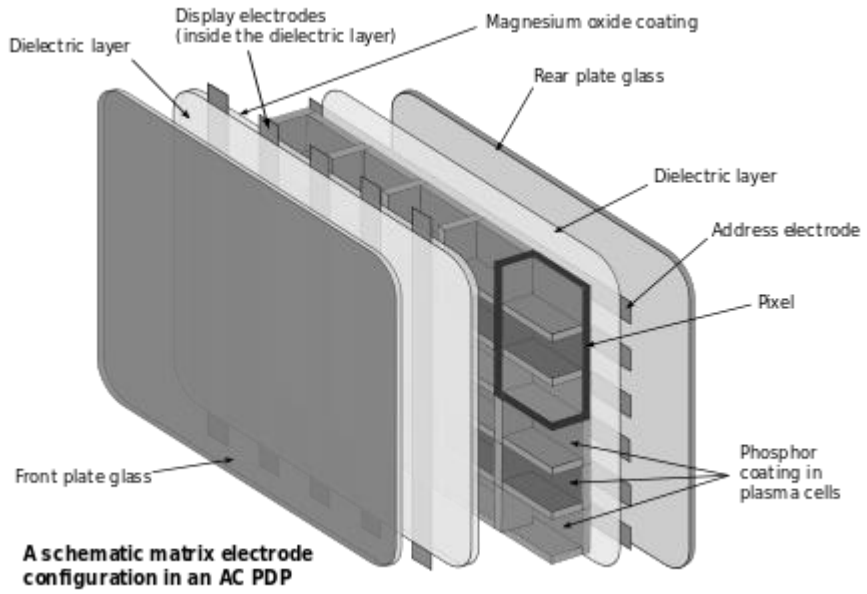 A schematic matrix electrode configuration in an AC PDP • A panel of a plasma display typically comprises millions of tiny compartments in between two panels of glass. • When a high voltage is applied across the cell, the gas in the cells forms a plasma. With flow of electricity (electrons), some of the electrons strike mercury particles as the electrons move through the plasma, momentarily increasing the energy level of the atom until the excess energy is shed. Mercury sheds the energy as ultraviolet (UV) photons. • The UV photons then strike phosphor that is painted on the inside of the cell. When the UV photon strikes a phosphor molecule, it momentarily raises the energy level of an outer orbit electron in the phosphor molecule, moving the electron from a stable to an unstable state • Each pixel in a plasma display is made up of three cells comprising the primary colors of visible light. Varying the voltage of the signals to the cells thus allows different perceived colors.	2M Diagram 2M Explanation
	c)	Draw block diagram of Hyper band tans with varicap tuning and describe its working	4M

Ans.

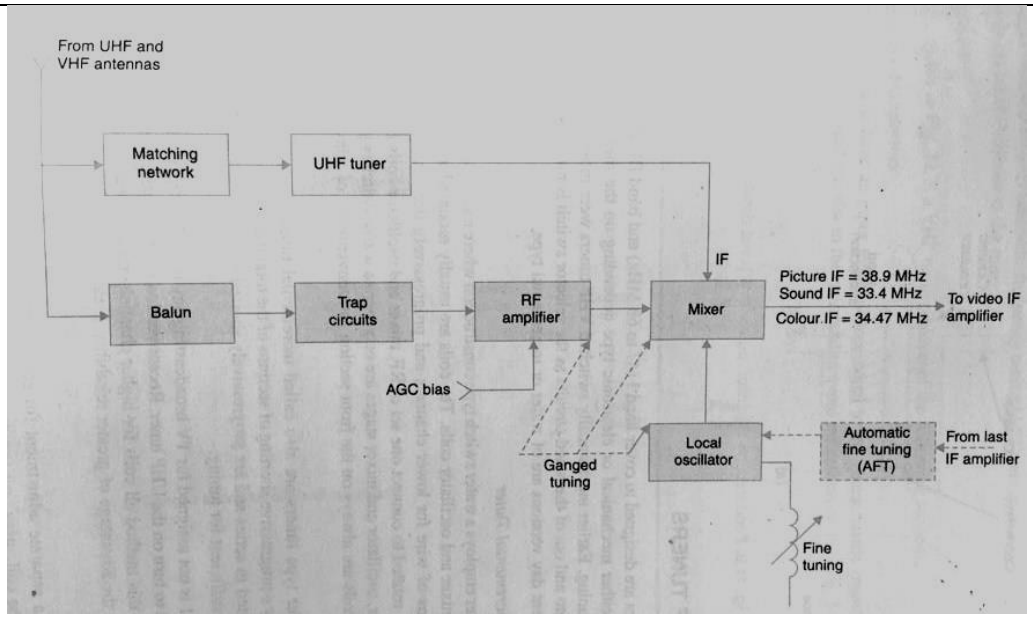

- In the VHF tuner section, the function of the channel selection is accomplished by Simultaneously Adjusting tuned Circuits of all the three stages that form Part of the tuner. This means that three or four tuned Circuits must be switched while changing channels.
- The mixer input Circuit is of Broad band type and thus there are only three tuned Circuits to be switched. Each tuned Circuit Consist of a coil (that is switched) and a capacitor. The resonating capacitance consists of distributed capacitance of the circuit plus small fixed Ceramic Capacitors. The fine tuning control is varied To obtain Exact picture and sound IF frequencies. The correct setting off local Oscillator frequency is indicated by the best picture obtained on the screen.
- The IF Output from the accompanying UHF Tuner IS low Because of weak input from antenna On UHF Channels. It is therefore coupled to the VHF tuner (see fig) whose mixer stage is switched to act as IF amplifier When any US ship channel is tuned. This boosts the signal to a level normally obtained when a VHF channel is tuned.

2M Diagram

2M Explanation

d) Compare CRT and Plasma displaytechnology — 4M

Ans. Note: Any other relevant point can be considered. — 1M Each point.

Parameter	Plasma display	LCD display
Brightness	Very poor in direct sunlight	Better than plasma
Power consumption	more	Less
contrast ratio	Over 1600:1	Over 3000:1
Weight	Heavy	Light
Backlight	Absent	present
Picture quality	Good	Better than plasma
Blurring of images	more	less

	e)	State need of reference oscillator and colour killer ckt in TV receiver	4M
	Ans.	**<u>Need of reference oscillator :</u>** • The U and V Chroma signals are separately produced at the transmitting end by what is known as double- balanced suppressed-carrier modulator. Thus it is necessary to regenerate the subcarrier in the receiver to affect demodulation of colour difference signal. • The reference oscillator circuit that generates a sinusoidal output at 4.43MHz is shown in figure above. • The frequency is determined by the center-resonant frequency of the crystal (XL) which in this circuit is approximately 4.43MHz. **<u>Need of colour killer circuits:</u>** The reception of a black-and-white television signal by a colour television receiver may cause unpleasant colour noises to appear on the screen as a result of operation of the associated colour signal circuitry, and thus in order to avoid this and provide satisfactory reproduction of a black-and-white image, it is desirable to make the bandpass amplifier inoperative upon receiving a black-and-white television signal	2M Need of Ref. Oscillator 2M Need of Colour killer circuit.