Important Instructions to examiners:

1) The answers should be examined by keywords and not as word-to-word as given in the model answer scheme.
2) The model answer and the answer written by candidate may vary but the examiner may try to assess the understanding level of the candidate.
3) The language errors such as grammatical, spelling errors should not be given more Importance. (Not applicable for subject English and Communication Skills.)
4) While assessing figures, examiner may give credit for principal components indicated in the figure. The figures drawn by candidate and model answer may vary. The examiner may give credit for any equivalent figure drawn.
5) Credits may be given step wise for numerical problems. In some cases, the assumed constant values may vary and there may be some difference in the candidate's answers and model answer.
6) In case of some questions credit may be given by judgement on part of examiner of relevant answer based on candidate's understanding.
7) For programming language papers, credit may be given to any other program based on equivalent concept.

Q. 1 A	**Attempt any THREE of the following.**		**12**
a)	**Explain feed forward control system with suitable diagram.**		**04**
Ans.	**Diagram:** 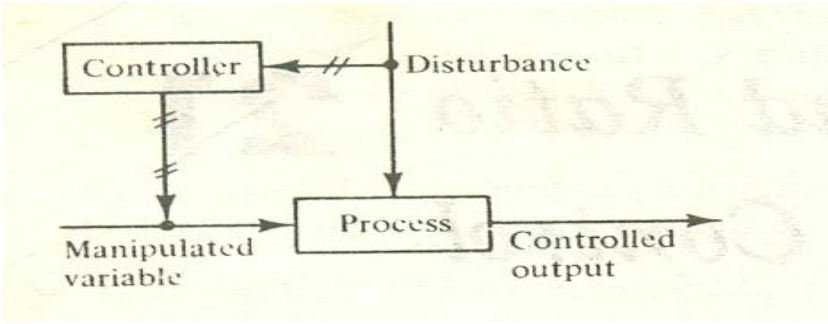 **Concept**: The basic concept of feed forward control is to measure important disturbance variables and take corrective action before they upset the process. **Explanation:** Above figure shows the simplified block diagram of a feed forward control system. It measures the disturbance directly and anticipates its effect on the process output. Accordingly it changes the manipulated variable by such an amount as to completely remove the impact of the disturbance on the controlled variable. Always the control action starts immediately after a change in the disturbance has been detected.	**02 Marks for diagram** **02 Marks for explanation**	

b)	**List the features of Ethernet TCP/IP.**		**04**
Ans.	**Features of Ethernet TCP/IP:** 1. It is transmission control protocol/internet protocol (TCP/IP) standard. 2. The most commonly used access protocol 3. TCP/IP has three layers 4. It is consistent with the two layers of the OSI model 5. Node management provides the functionality that fragments and/or reconstructs messages into/from frames of data which are of the correct length for transmission 6. The hardware interface and software drivers necessary to support these layers of access must be provided by any PORT card	**01 mark each for any four points**	
c)	**Draw the block diagram of process control system. State function of any two blocks.**		**04**
Ans.	**General block diagram of a process control system:** 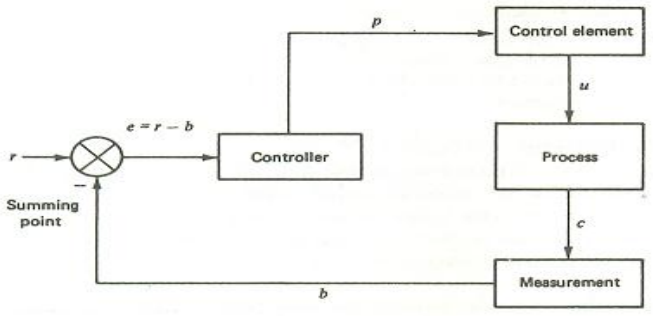 **Functions:** 1) Controller: It is the brain of the control system that takes decision to maintain the process variable to its desired value. Mostly the summing point is also an integral part of the controller. The summing point outputs an error signal (e = r - b) to the controller, from the reference input(r) and set point (b). **2)** Final control element: These are designed to take action for implementing the decision taken by the controller. Signal generated by the controller (p) is transmitted to the final control element situated in the field connected to the process/plant. 3) Measurement: for measuring process variable transducer is used which convert non electrical parameter into electrical	**02 Marks for diagram** **1 mark each for any two blocks description**	

parameter.

4) Process: In process different operations are carried out and measurement and controlling of process parameters are actually carried out with the help of transducer and controller.

d) Differentiate between single seated and double seated globe value. **04**

Ans. **Comparison between single seated and double seated globe valve:** **1 mark each for any 4 points**

Sr No.	**Single seated valve**	**Double seated valve**
1	Single plug is used	Double plug is used
2	Low flow capacity	High flow capacity
3	Tight shut off	Tight shut off is not possible
4	No leakage	Leakage is present
5	Low pressure drop	High pressure drop
6	No cascade required	Cascade is required to avoid leakage
7	More force is required to drive the stem	Less force only is required to drive the stem
8	Used for small diameter applications	Used for large diameter applications

B. Attempt any ONE of the following **06**

a) Draw and explain a typical distillation column. **06**

Ans. **Diagram:** **03 marks for diagram**

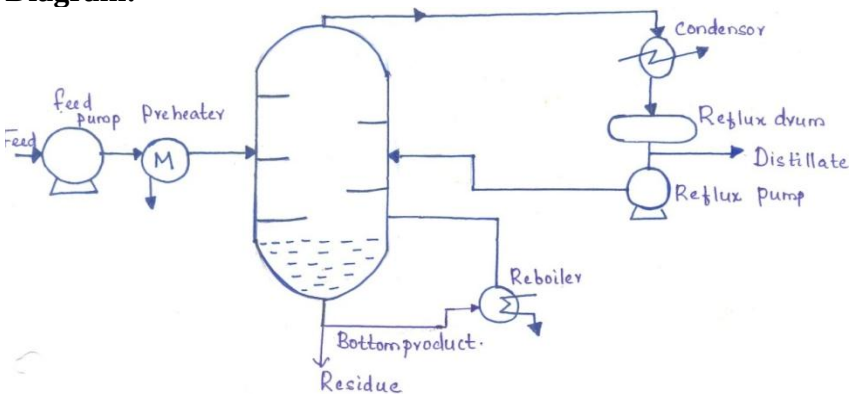

	Explanation : Distillation is a process used for separating mixtures having two or more liquid component mixed with each other based on the difference in boiling points. Fig. above shows a typical distillation column. It consists of cylindrical shell, reboiler and condenser. The liquid mixture to be separated enters the cylindrical shell through the feed inlet. The section above feed plate is rectifying section, in which vapours are washed to remove the less volatile component. The section below feed plate is stripping section, in which liquid is stripped off from more volatile component by the rising vapours. The vapours generated in the reboiler are fed to the bottom of the column. Liquid removed from the bottom of the column is called bottom product. The vapours from top of the column is fed to condenser. The condensed component is taken from the top as top product.	**03 marks for explanation**	
b)	**Find the proper valve size in inches and centimeter for pumping the liquid flow-rate of 600 gal/min with maximum pressure difference of 55 psi, liquid specific gravity is 1.3. Find valve size.**		**06**
Ans.	**Data given:** Q = 600 gal/min, ΔP = 55 Psi, G = 1.3 Equation for flow rate, $Q = C_V\sqrt{\frac{\Delta P}{G}}$ Therefore, $C_V = Q\sqrt{\frac{G}{\Delta P}}$ Substituting we get, $C_V = 600\sqrt{\frac{1.3}{55}}$ = 92.24 For a C_V of 92.24, the required valve size is 3 inches. (Refer table) The valve size in cm = 3x2.54 = 7.62 cm	**04 Marks for formula & substitution** **01 Mark each for answer in inches & cm**	
Q.2	**Attempt any TWO of the following.**		**16**
a)	**Enlist different process displays. State the function of any two displays. Draw the schematic diagram of DCS in cement industry. Write the steps to control process operation in cement industry.**		**08**
Ans.	**Types of process displays:** 1.Group display, 2.Overview display, 3.Detail display, 4.Graphic display, 5. Trend display.		

	Group display: It shows the operating parameters of 8, 12 or 16 control loops, arranged in rows so that they look like faces of instruments on an instrument panel. Each of the control loops is represented by a rectangle with bar graphs to indicate values of process variable, set-point, output signal and their limits. **ii) Overview display:** It shows the bare essentials of a number of groups, each group in a separate rectangle. The set-point is shown as a straight line and deviation of process variable from set-point appears as vertical bar. **iii) Detail display:** It is specific to single control loop. It shows the same bar graph representation like group display, but it includes additional information defining controller parameters, alarm limits and other characteristic of control loop. **iv) Graphic display:** It shows pictorial representation of plant under control. This display includes process and control information and it can be interactive and real time information. Some displays are capable of showing movement in pipeline, tank and reactors as well. **v) Trend display**: It shows real-time trend graphs of process variable, set-point, and controller output over a period of time **Schematic of DCS in cement industry:** 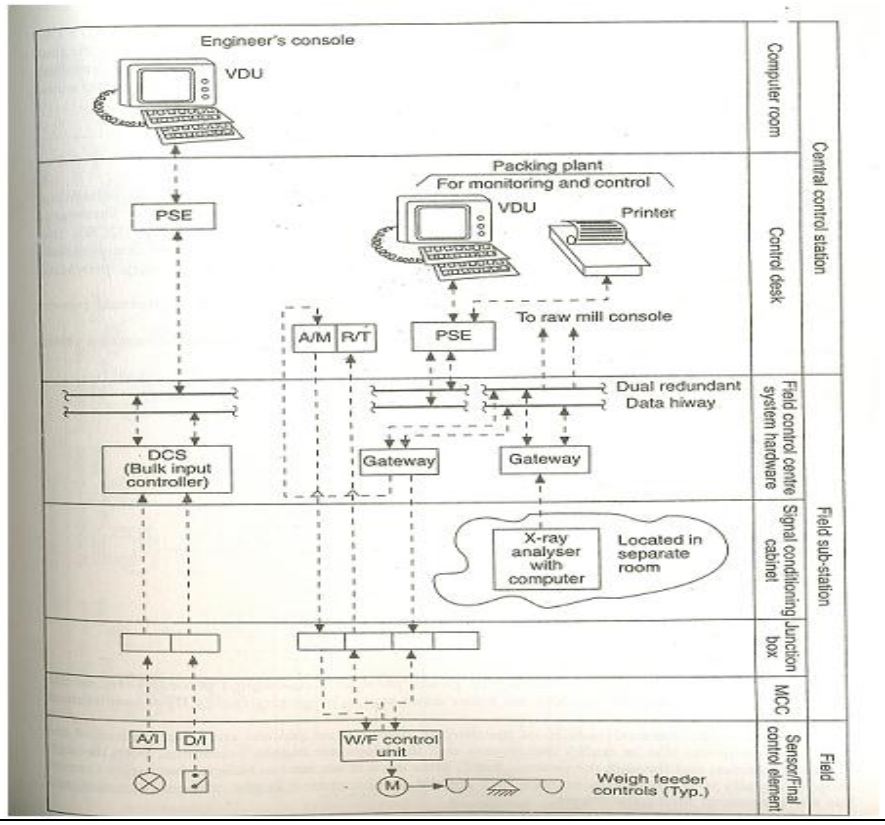 	**1 marks for Types** **02 marks for function of any two display** **3 marks for dia.(A general block diagram represent ation with mention of the units of chemical plant also may be considere d)**	

	Steps involved in process operation: It has the following units • Crusher section • Raw mill section • kilin and coal mill section • Cement mill section • Packing & dispatch Each unit will have its own local control room, which are monitored by a central control room. Raw mill automation is mainly to control the blending system. Being the heart of the plant kiln should have optimum control to maintain kiln fuel level, kiln speed, calciner fuel, cooler speed, oxygen content and cooler fan speed. In packing and dispatch section, automatic bag filling to certain weight and automatic loading in trucks are implemented.	**2 Mark for briefing**	
b)	**Enlist the documents required for instrumentation in project engineering. State role of instrumentation engineer in project engineering.**		**08**
Ans.	**Documents required for instrumentation in project engineering:** 1) Instrument index sheet 2) Data sheet/ instrumentation specification sheet 3) I/O list 4) P & ID diagram 5) Loop wiring diagram 6) Process flow sheet 7) installation diagram **Instrument index**: It is a document containing list of instrument devices within a plant. Instrument index shall include tag number of all physical instruments (e.g. field instrument, physical alarm and indicator) and pseudo instruments which commonly named "soft tag" (e.g DCS indication, alarm, and controller). Instrument index shall be created at the beginning of project and	**02 mark for listing** **(description optional)**	

	considered as a live document which should be kept updated even though the plant has been operated. Instrument index shall be revised if there is any plant or system modification which causes additional, removal, or resetting of instrument. **Datasheet:** Data sheet or spec sheet is a document that summarizes the performance and other technical characteristics of a product, machine, component (e.g., an electronic component), material, a subsystem (e.g., a power supply) or software in sufficient detail to be used by a design engineer to integrate the component into a system. **I/O List:** It is a document containing list of instrumentation which serve as an input or output of control system. Therefore, only the tag number that physically has a cable which connects to the control system appears on I/O List. When there are more than one control system in a plant (let say PCS and SIS), the I/O list clearly indicates which instrument is assigned to which control system or may separate them to different section in the document. **Roll of Instrumentation engineer in Project engineering:** • designing and developing new control systems • testing, maintaining and modifying existing systems • analyzing data and presenting findings in written reports • managing operations • working collaboratively with design engineers, operation engineers, purchasers and other internal staff • liaising with clients, suppliers, contractors and relevant authorities (e.g. the Nuclear Decommissioning Authority) • project management within cost and time constrained environments • understanding and ensuring compliance with relevant health and safety regulations and quality standards • providing advice and consultancy support • purchasing equipment • writing computer software and test procedures • Developing new business proposals.	**6 marks for at least 06 points**	
c)	**Define valve positioner. Draw the neat diagram of electro-**		**08**

	pneumatic valve positioner. Write its working.		
Ans.	**Definition of valve positioner**: The valve positioner is a high gain proportional controller which measures the valve stem position and compares it against its set-point (controller output signal) and if there is a difference, corrects the error by adjusting stem position. **Diagram of Electro-pneumatic valve positioner:** 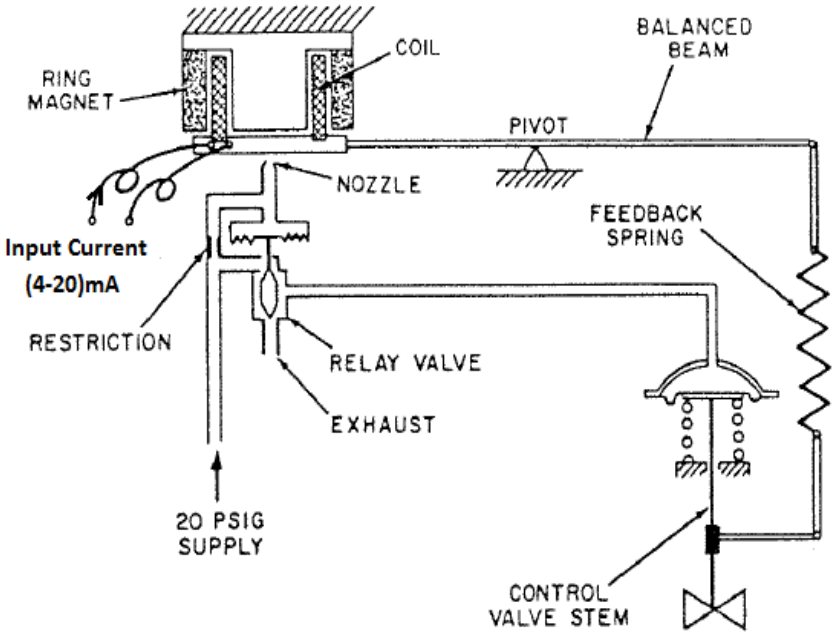 Electropneumatic force balnce type valve positioner **Working: A**bove figure shows an electro-pneumatic valve positioner. It has a force balance mechanism consisting of electromagnetic coil, flapper-nozzle system, relay, balanced beam, and feedback spring. As an electrical control signal is applied to the coil placed in a ring magnet changes its position. Higher the electrical signal , more is the repulsive force between the magnet and the coil. This causes the nozzle back pressure to increase and is applied to the actuator through the relay valve. The change in stem position causes change in the position of the balance beam, which thereby increases the nozzle back pressure and consequently more control signal is supplied to the control valve. This process is continued until the opposite force across the pivot is balanced.	**2marks** **03 marks for diagram** **3 marks for description**	

Q.3	**Attempt any FOUR of the following**		**16**
a)	**Describe in brief feedback control scheme for heat exchanger with neat diagram.**		**04**
Ans.	**Diagram:** 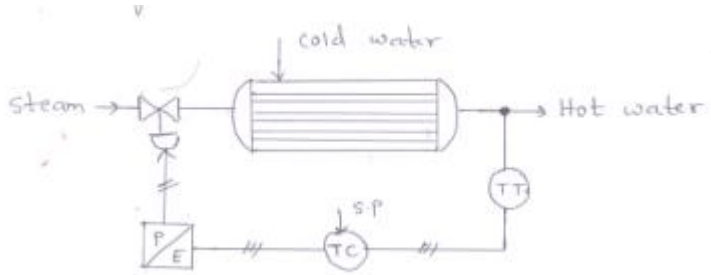 **Explanation:** The control objective is to control the temperature of hot water at the desired temperature which is supplied as set point (S.P) to the temperature controller (TC). The temperature transmitter (TT) senses the actual hot water temperature and gives as input to TC. The TC compares the actual temperature with the SP and generates an error signal. This signal is converted into pneumatic signal by electo-pneumatic converter (E/P) which forms the activating signal for the control valve. The control valve then manipulates the steam flow appropriately. i.e. increase the steam flow if the actual temperature is below the desired value and vice versa.	**02 marks for diagram** **02 marks for explanation**	
b)	**State the need of instrument index sheet.**		**04**
Ans.	**Need of Instrument Index sheet:** • This document is prepared with reference to each P & I Drawing. • This document contains list of instruments coming under each TAG No., there functions, locations, etc. • This document contains each and every information about instrumentation which is shown on the P & ID • This document also contains nos. of other documents for cross reference. Therefore this document is open for entries till all the documents are prepared.	**1mark for each relevant point**	
c)	**Draw and explain the cascade control scheme for any two variables in distillation columns.**		**04**
Ans.			

	i) Cascade control of bottom level 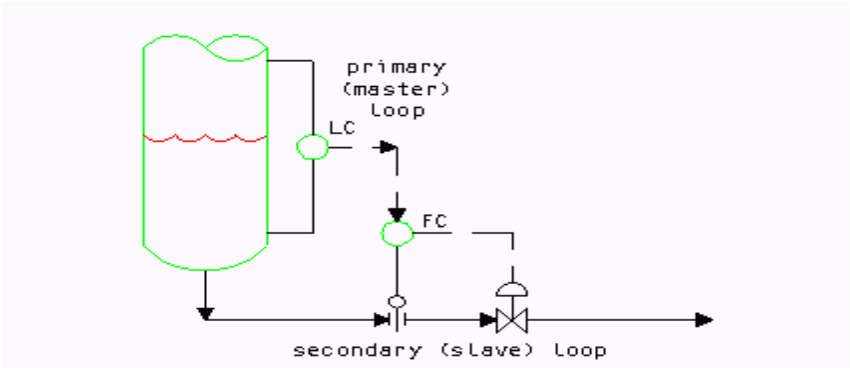 **Description:** Cascade control is often used with levels on distillation columns and in reflux drums Figure above shows bottoms level control with the bottoms level resetting a flow controller on the bottoms rate. The primary control loop resetting has the set point(level) given by the operator; whereas the output of the LC acts as the set point for FC in the secondary loop. Thus any changes in the flow rate will immediately start the corrective action; without waiting for it to affect the level. **ii) Cascade control of distillate composition (top product)** 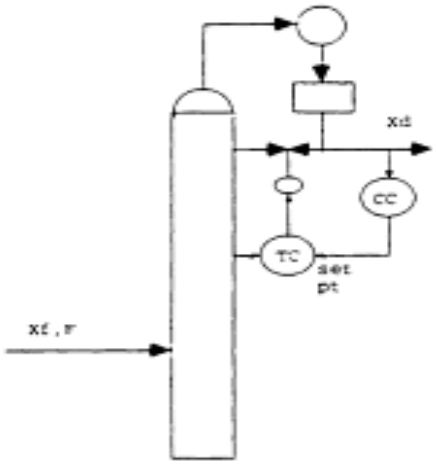 The manipulated variable is the reflux to the tower. The control objective is to keep the overhead composition as close to the set point as possible in spite of fluctuations in the feed flow and composition. In the diagram shown above, a tray temperature controller is cascaded to a composition controller. Thus, any change in the temperature starts the corrective action by adjusting the reflux rate before it can possibly affect the composition of the distillate. A composition controller alone	**Diagram for each scheme: 1 Mark each. Description for each scheme: 1 Mark each.** **(any relevant diagram with explanation may considered)**	

	will compensate for upsets with more process lag.		
d)	**Describe in brief ratio control system.**		**04**
Ans.	**Ratio control scheme:** • Ratio control is a special type of feed-forward control. • The objective of a ratio control scheme is to keep the ratio of two process variables at a specified value. • The two process variables are usually flow rates of a manipulated stream (m) and a disturbance stream(d).Here, the disturbance stream is also referred to as wild or load stream. • Thus, the ratio (R) of two variables, m and d **R = m / d** is controlled rather than controlling the individual variables. **There are two ways to implement ratio control scheme.** i) Ratio control scheme using Divider ii) Ratio control scheme using Multiplier **i) Ratio control scheme using Divider:** Here the manipulated stream (m) is under standard feedback control. The flow of the wild stream(d) is measured using flow transmitter(FT-101) and sent to a 'multiplier' (FY-102) which multiplies the signal by the desired ratio(Rd) yielding the set-point for the flow controller(FC-102).The flow controller then adjusts the flow rate of manipulated stream(m). The main advantage of this method is that the process gain remains constant because divider is not used. 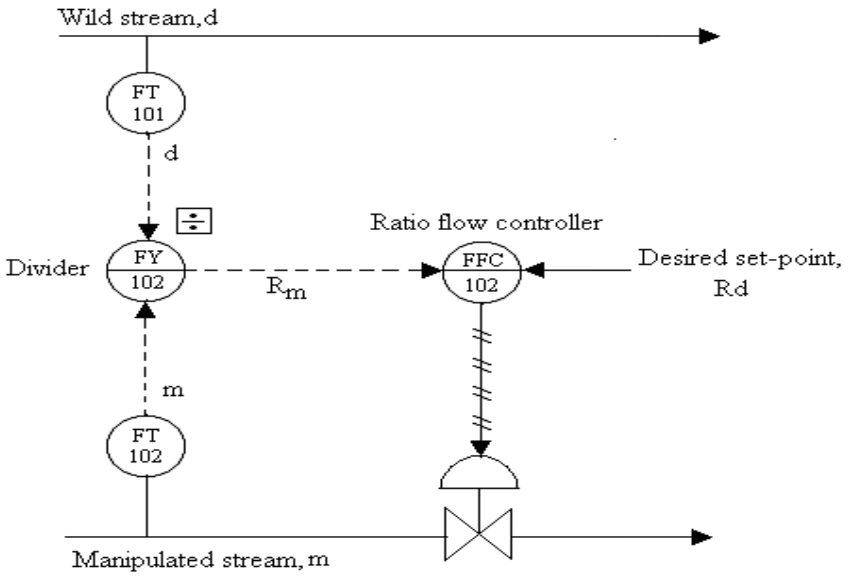 Ratio control scheme using Divider	**Any one type:** **Description 02 mark** **Diagram 02 mark** **(Ratio control scheme using Multiplier May be considered)**	

e)	**Name the different DCS communication methods. Describe any one.**		**04**
Ans.	i) Profi Bus ii) Modbus iii) Ehernet iv) Control net **ModBus description** Modbus is a communication protocol developed by Modicon systems. In simple terms, it is a way of sending information between electronic devices. The device requesting the information is called the Modbus Master and the devices supplying information are Modbus Slaves. In a standard Modbus network, there is one Master and up to 247 Slaves, each with a unique Slave Address from 1 to 247. The Master can also write information to the Slaves. Modbus is an open protocol, meaning that it's free for manufacturers to build into their equipment without having to pay royalties. It has become a very common protocol used widely by many manufacturers throughout many industries. Modbus is typically used to transmit signals from instrumentation and control devices back to a main controller or data gathering system. The physical media used for transmission is double shielded twisted pair and the maximum distance is 1300 m. The data transfer rate is typically 9.6 Kbps to 19.2 Kbps.Various network topologies supported are Linear, star, daisy chain and tree.	**1 Mark for the names** **Description of any one scheme-3 Mark**	
Q.4 A	**Attempt any THREE of the following**		**12**
a)	**Describe the working of solenoid control valve with neat diagram**		**04**
Ans.	**Diagram:** 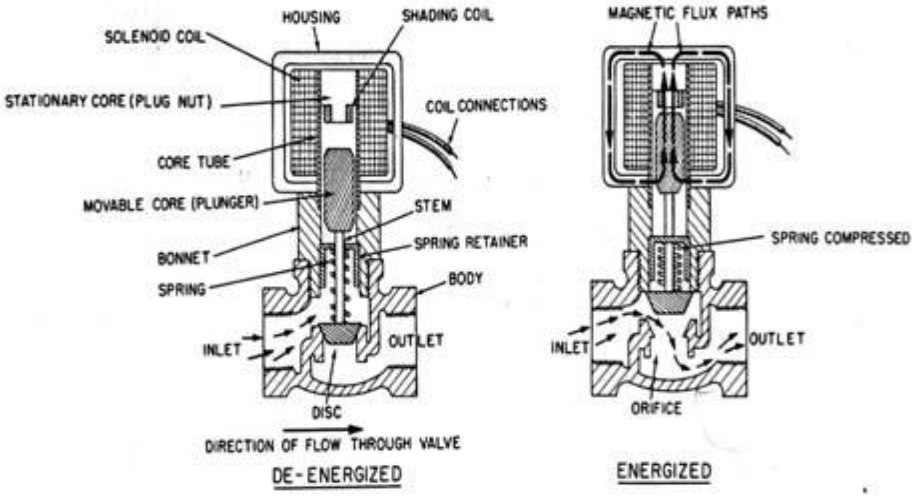 	**Any one of the diagram - 2Mark**	

	Description: A solenoid valve is an electromechanically operated valve. The valve is controlled by an electric current through a solenoid: Most solenoid valves operate on a digital principle. They therefore, possess two distinct states, which are (1) - when the coil is activated by an electrical current, and (2) - when the valve is resting (without electricity). In the case of a two-port valve the flow is switched on or off. If the valve is open, then the two ports are connected and fluid may flow between the ports; if the valve is closed, then ports are isolated. If the valve is open when the solenoid is not energized, then the valve is termed normally open (N.O.). Similarly, if the valve is closed when the solenoid is not energized, then the valve is termed normally closed. This type of valve is actuated entirely by the solenoid force (produced by magnetizing the coils by passing electric current). The plunger with a seal acting as the main closure device is forced directly onto the valve seat by the fluid pressure and closing spring..The valve is opened directly by the solenoid force only.	**Description – 02 Mark**	
b)	**State the need of valve positioner. Name its types.**		**04**
Ans.	**Necessity of Valve Positioner:** 1. To overcome friction on valve stem through high open loop gain. 2. To increase speed of response when the distance between controller and Valve is large by dead ended controller. 3. To achieve faster response speed. 4. To provide reverse action of signal pressure. 5. To provide heat range application. 6. Delaying or slowing valve action. 7. Reduces valve hysteresis 8. Large varying fluid pressures. 9. It can modify valve characteristics **Type:** 1) Pneumatic i) Force balance Valve positioned ii) Motion balance Valve positioned **2)** Electro-pneumatic	**Any 3 points -03 Mark** **Types- 01 Mark**	
c)	**State and explain selection criteria for DCS system (any 4 points).**		**04**
Ans.	**Selection criteria of DCS:** **Nature of Manufacturing and type of product manufactured** • No. of Products manufactured : Single / Multiple • Recipe parameter : Constant or Variable		

	• Procedure : Single or Different • Equipment Utilization : Fixed or Flexible • Frequency of changes to formula & Recipe : Never or Often • Regulatory / Analog loop control • Complex Batch Control **1. The value of the product being manufactured and the cost of downtime** • If the value of the batch is high, either in raw material cost or market value, & the downtime not only results is lost production but potentially dangerous and damaging conditions, the DCS should be selected 2. **. Factory environment**: : • The environment in process automation can be volatile & dangerous. • In this scenario, the HMI is a central control room console that provides the only complete "window" into the process, enabling operator to monitor & control the process which are occurring inside pipes & vessels located throughout the plant. 3. **Role of operator**: • The DCS plant require an operator to make decision and continuously interact with the process to keep it running. • In fact, operators process knowledge is often critical to operational excellence & keeping the process running optimally **4. What system performance is required** • The speed of logic execution is a key differentiator between PLC and DCS. While fast scan rates are necessary to be able to effectively control the operations involving motion control, high-speed interlocking, control of motors and drives, he DCS does not have to be that quick. • Control Loops require deterministic Scan execution at speed 100-500ms • System redundancy is often required • Online configuration changes often required • Analog Control – Simple to Advanced PID upto Advanced	**01 Mark for each point (Any 4 relevant points).**	

	Process Control-cascade, Split range, Ratio etc. 5. **Degree of customization required** • In PLC Powerful Programming languages are typically available to facilitate the creation of custom code from scratch. DCS consists of Pre-engineered solutions consists of standards, templates & extensive libraries 6. The highest priority of DCS is to deliver reliability & availability, which often results in a design which trades unlimited functionality for repeatability and dependability		
d)	**Explain how the feed water level is controlled in boiler.**		**04**
Ans.	**Feed water level control in boilers** **Single element drum level control system** Controller is fed to the feed water control valve (FCV-1). If the feed water valve is pneumatic, an l/P (current-to-pressure) converter is required to change the controller current output to accommodate the pneumatic valve. Auto/Manual transfer of the feed water control valve is accomplished via FK-1 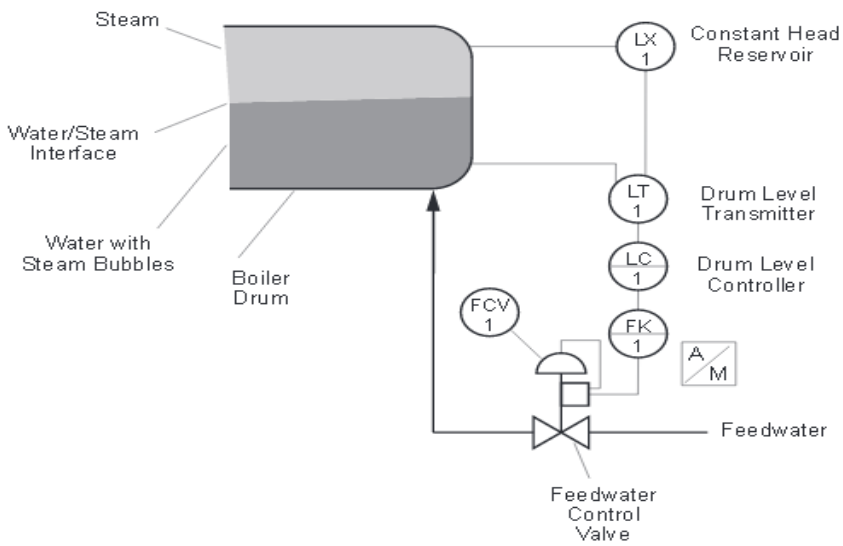 *Single-element drum level control system* **OR** **Two-element drum level control system:** The term 'two-element' is derived from measurement of two variables: steam flow and drum level that influence on the feed water valve position. It is sometimes referred as a combination 'feed-forward-feedback' system because the steam flow demand is fed forward and the drum level signal becomes the feedback for	**Any one of the scheme** **Diagram- 02 Mark And description- 02 Mark**	

controlling/manipulating feed water to boiler drum.
The two-element drum level control shown in following figure. Steam flow is measured by the steam flow transmitter (FT-1), its signal is fed to the feed water flow computer (FC-1) after processing through the square root extractor (FY-1). As in the single-element level control, the drum level is measured by the level transmitter (LT- 1) and its signal is transmitted to the drum level controller (LC-
1). In the drum level controller, the process signal is compared to the drum level set-point, where a required corrective output signal to maintain the drum level is
produced. This corrective signal is sent to the feed water flow computer. The feed water flow computer combines the signal from the two variables, and produces an output signal to the feed water control valve (FCV- 1). Auto/Manual transfer of the feed water control valve is accomplished via FK-1.

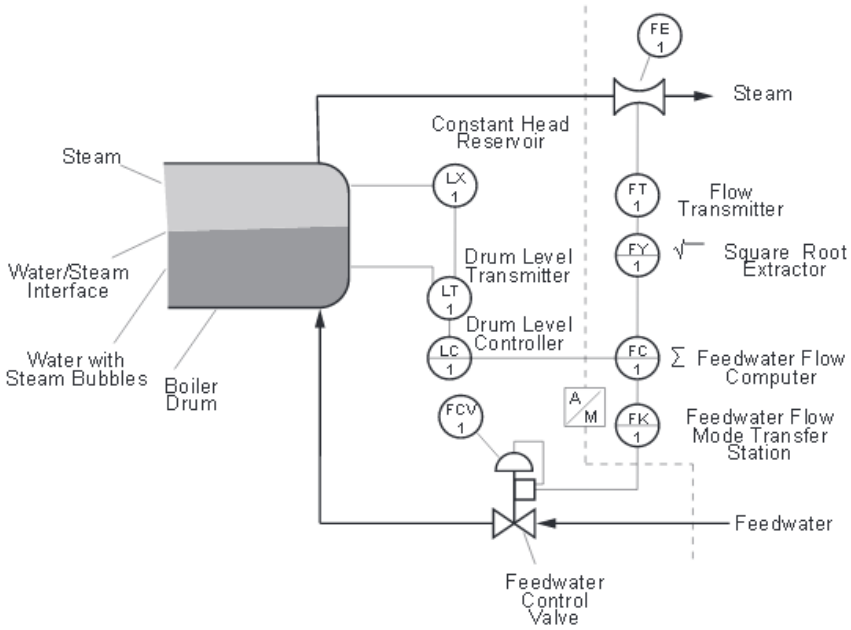

Two-element drum level control system

OR

Three -element drum level control system:
The term 'three-element' is derived from measurement of three variables: steam flow, drum level and feed water flow that influence on the feed water valve position.
Figure below shows the control scheme for three-element drum level control. To the left of the dotted line, the instrumentation is the same as

	that for the two-element drum level control, with one exception: the output of the feed water flow computer now becomes the set-point of the feed water flow controller (FIC-2). Equipment required to complete our three-element drum level control scheme includes an additional flow device (FE-2) and differential pressure transmitter (FT-2)The area to the left of the dotted line in following figure functions the same as that of a two element drum level control. We can pick up the operation for this scheme where the output signal of the feed water flow computer (the combination of steam flow and drum level) enters the feed water controller (FIC-2). This in effect becomes the set-point to this controller. Feed water flow Is measured by the transmitter (FT- 2). The output signal of the feed water flow transmitter is linearized by the square root extractor, (FY-2). This signal is the process variable to the feed water controller and is compared to the output of the feed water flow computer (set-point). The feed water flow controller produces the necessary corrective signal to maintain feed water flow at its set-point by the adjustment of the feedwater control valve (FCV-1). 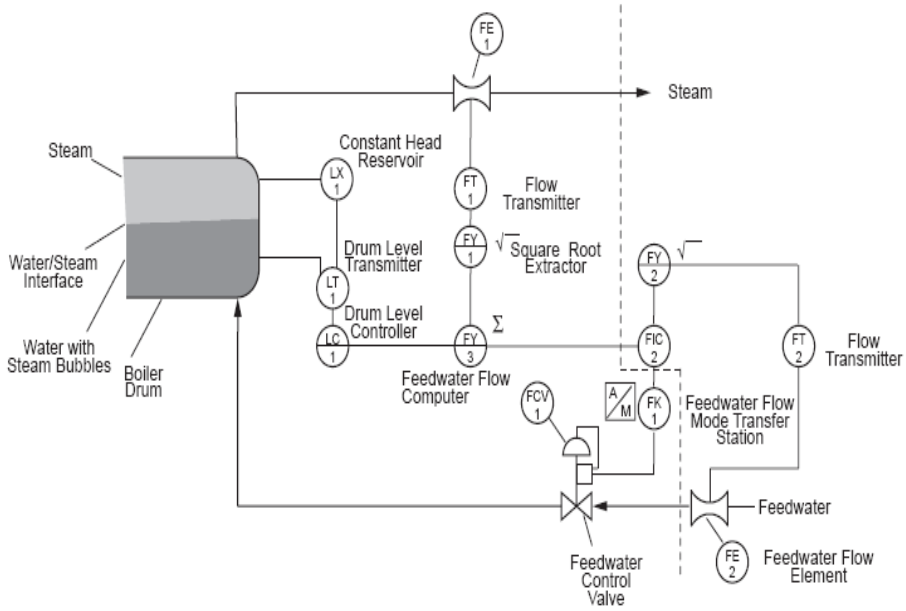 *Three-element drum level control system*		
Q.4 B	**Attempt any ONE of the following**		**06**
a)	**Describe different remedies to avoid problem of cavitation and flashing in control valve**		**06**
Ans.	**Cavitation Control:** **1)System Design:**	**02 marks for each**	

	1) Downstream of the valve breakdown orifices are sometimes used to aritially increase the back pressure. However the cavitations simply get relocated by this techniques. 2)Used of sacrificied member:- In some cases a low cost valve is used which is allowed to cavitated . immediately down stream of valve where cavitation is likely to occurs in expensive pipe or fitting is installed, which is replaced periodically. **2)Material Selection:** No material is completely immune (resist) to cavitation damage. How ever metals with greater hardness and strength energy offer better resistance to cavitation (e.g.ss alloy steel) 3)**Use of cavitation control equipment:-** Flow is passed through several restrictions in series as against a single restriction each. Restriction dissipates a certain amount of energy to the next stage .However this reduces the efficiency of a device and results in low pressure recovery.	**relevant remedy**	
b)	**Discriminate human aided and automatic process control (any 6 points)**		**06**
Ans.	**Human aided control:** 1. Product consistency not there. Depends on the person. 2. Product is less since human can not work beyond certain time. 3. Efficiency limited. 4. Safety of humans is a major concern. 5. Quality of product is not good. 6. Becomes costly science human labor cost is involved. 7. Reliability, availability and predictability uncertain. **Automatic process control:** 1. Consistent product quality. 2. Machines run 24*7, 365 days a year, therefore produces more yield. 3. Efficiency is excellent. 4. Machine can work safely in any environment. 5. Quality of product is excellent. 6. Only initial capital investment is required. Run time cost is less. 7. High Reliability, availability.	**½ mark each for any 6 points** **½ mark each for any 6 points**	
Q.5	**Attempt any TWO of the following**		**16**
a)	**Draw physical diagram and P& I Diagram for single element and**		**08**

	double element boiler process.		
Ans.	• **Single-element boiler process:** **P&I Diagram:** **Physical diagram:** 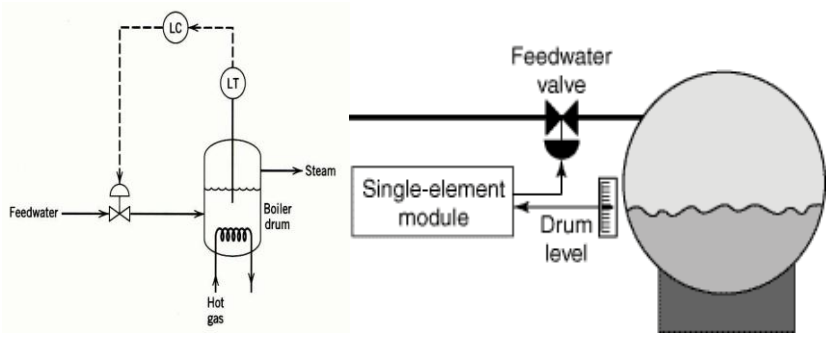 • **Double-element boiler process:** **P&I Diagram:** 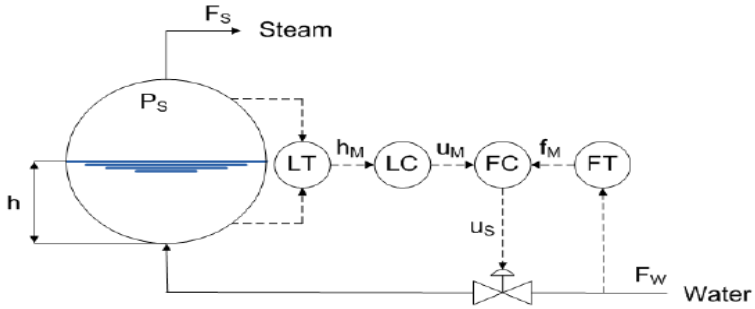 **Physical diagram:** 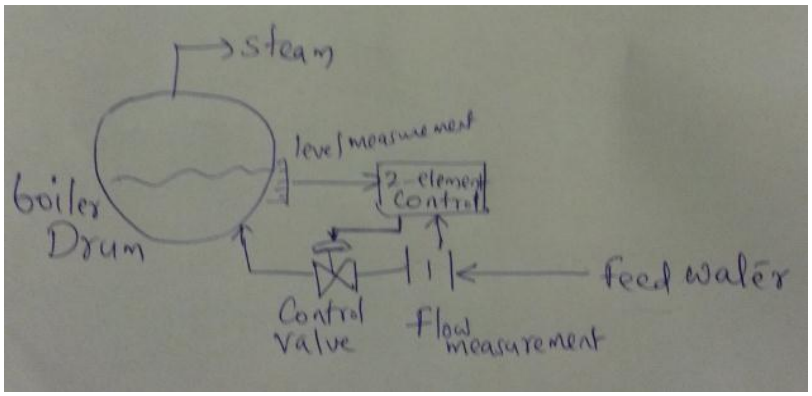 	**2 marks for each diagram**	
b)	**Draw the architecture of DCS system. State the functions of all**		**08**

	components in it.		
Ans.	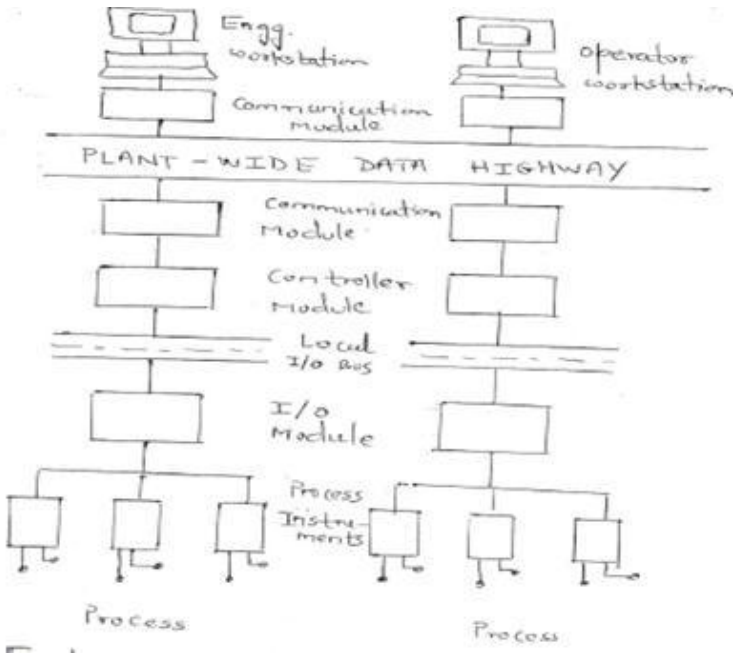 **1. Input-output module:** All these modules are mounted in a single or multirack system connected on common communication highway. I/O module scan and digitize the process in simple logic. It provides the main interface between DCS and process being controlled. They convert the information provided by process instruments into digital form. They also provide signal filtering. **2. Local i/o bus:** It provides bridge between I/O and controller module and is restricted in terms of geographical area and data loading. It operates at slower speed than the plant wide data highway communication. **3. Controller module:** It is the brain of the DCS. It updates field data from I/O module and performs control calculation and logic to make the process changes. It also consists of memory, registers and buses, CPU, ROM and RAM. Hence it is microprocessor based device. **4. Communication module:** It provides communication between data highway and other modules such as controller module and user interfaces. Communication module manages the flow of information between the data highway, controller	**02 marks for Diagram** **06 marks for explanation**	

	module and user interface **5. Data highway:** The data highway is the communication device that allows distribution of the controlling function throughout a large plant area. It is the digital data link that connects the multifunction controllers with the central operator stations. Data highway is microprocessor based module through which the messages and files are transferred. The medium can be coaxial cable or the fiber glass cable. **6. User interface:** It provides the interface between user and process. It can either operator interface or engineer interface. • Operator Station:- it performs: 1) From operator station, operator can view entire plant/process and can control the process. 2) Controlling the complete process (regulatory and supervisory control); allows configuration of all inputs 3) Alarm display setting. • Engineer Station:- it performs following functions: 1) system design and generation of system loop diagram 2) documentation 3) programming **4)** system maintenance		
c)	**Draw a neat labeled diagram of shell and tube heat exchanger. Explain the concept of co-current heat exchanger.**		**08**
Ans.	• **Shell and tube heat exchanger:** **Diagram:** 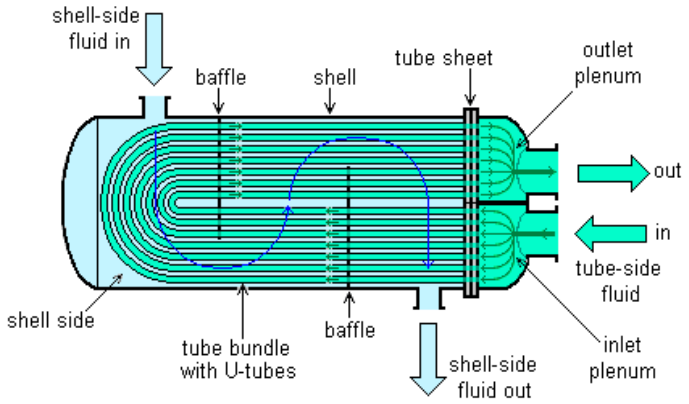 **Explanation:** A shell and tube heat exchanger is the most common type of heat	**04 marks for Diagram**	

	exchanger in oil refineries and other large chemical processes, and is suited for higher-pressure applications. This type of heat exchanger consists of a shell (a large pressure vessel) with a bundle of tubes inside it. One fluid runs through the tubes, and another fluid flows over the tubes (through the shell) to transfer heat between the two fluids.). Heat is transferred from one fluid to the other through the tube walls, either from tube side to shell side or vice versa. The set of tubes is called a tube bundle, and may be composed of several types of tubes: plain, longitudinally finned, etc. In order to transfer heat efficiently, a large heat transfer area should be used, leading to the use of many tubes. In this way, waste heat can be put to use. This is an efficient way to conserve energy. • **Co current exchanger:** **Diagram:** 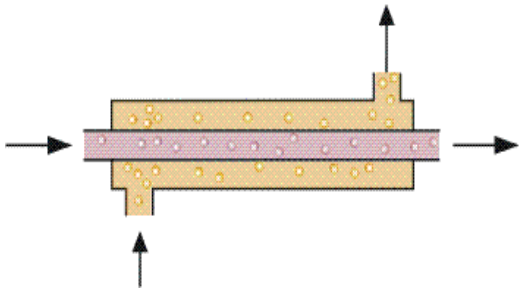 **Explanation:** A heat exchanger is a device for efficient heat transfer from one medium to another without the two mediums having to mix together or come into direct contact direct contact. In co current heat exchangers, the two mediums flow parallel to each other and in the same direction. This is less efficient than counter current type but provides more uniform wall temperatures.	**(explanation optional)** **02 marks for Diagram** **02 marks for explanation**	
Q.6	**Attempt any FOUR of the following**		**16**
a)	**Draw P &ID symbol for**		**04**
Ans.	**i) Temperature transmitter:**  **ii) Rotameter:**	**1 mark for each**	

	 Or 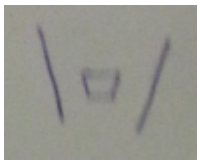 **iii) Orifice meter:** 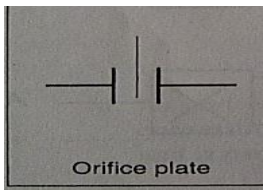 **iv) Venturimeter:** 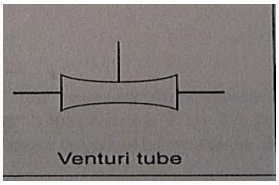		
b)	**Draw control valve characteristics.** **Define i) Rangeability ii) C_v**		**04**
Ans.	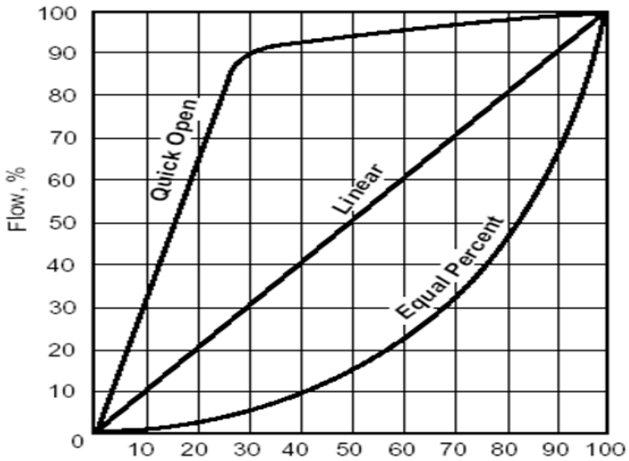 **i. Rangeability:**	**2 marks**	

	Rangeability = $\frac{Q_{max}}{Q_{min}}$ Q_{min} represents the minimum flow rate. Q_{max} is the maximum flow rate. Therefore Rangeability is the ratio of maximum flow rate to minimum flow rate. **ii. C_v :** It is the Valve flow coefficient. It is defined as the number of U.S gallons of water per minute that flow through the fully open valve with a pressure differential of 1 psi. It is the sizing factor for the valve.	**1 mark** **1 mark**	
c)	**State the principle of evaporators. Draw feed forward control system for single effect evaporators.**		**04**
Ans.	**Principle:** An evaporator is a device used to turn the liquid form of a chemical into its gaseous form. The liquid is evaporated, or vaporized, into a gas. Evaporation is a special case of heat transfer to a boiling liquid. It is the separation of a liquid mixture into a liquid product (concentrate or thick liquor) and a vapor byproduct. It is used to concentrate a non-volatile solute from a solvent, usually water. This is done by boiling off the solvent. Concentration by evaporation is normally stopped before the solute begins to precipitate. Otherwise the operation will become crystallization. **Diagram :** 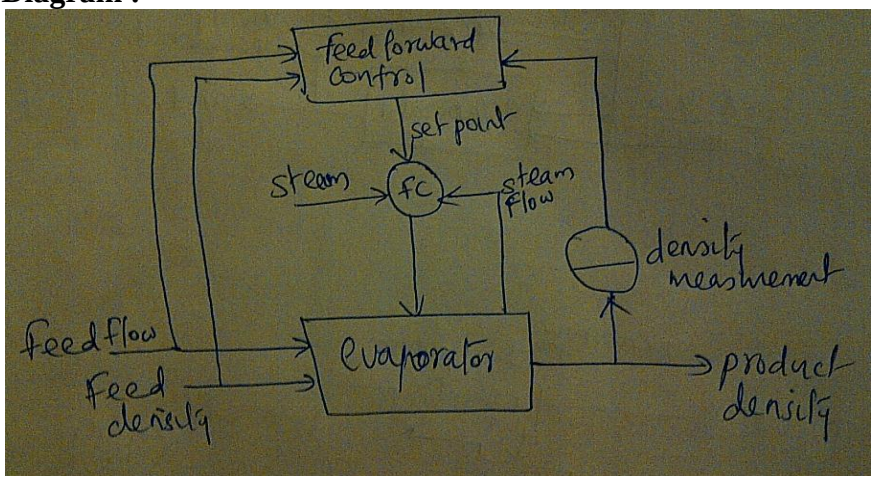 OR	**02 marks for Principle** **02 marks (Any one diagram)**	

	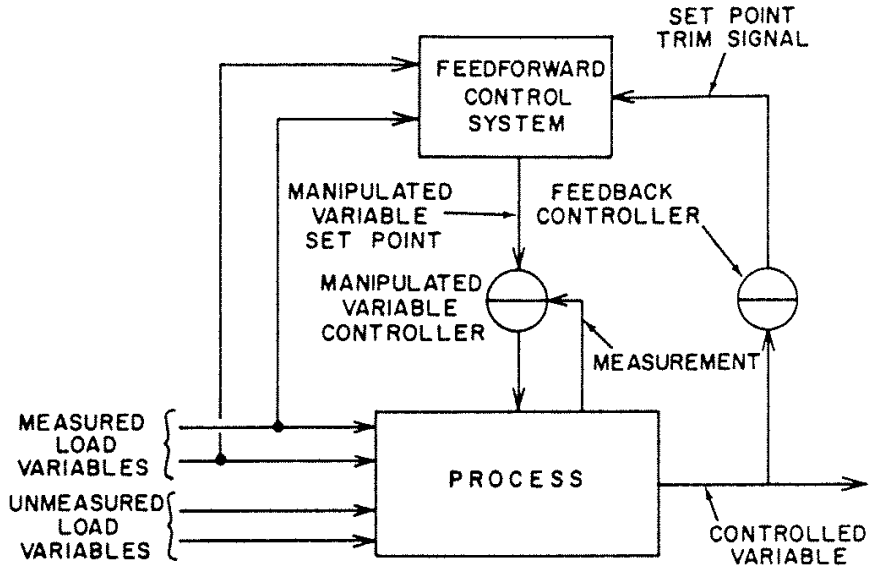 **Feedforward control:** • In the evaporator applications, the control of product density is affected by variations in feed rate and feed density (shown as measured load variables in the diagram) to the evaporator. In order to overcome these load variations, the manipulated variable (steam flow) must attain a new operating level. • The feed forward control system is used to take the corrective action before the error takes place. Thus it reacts to the variations of feed rate and feed density before they affect the product density by controlling the steam flow. Thus the corrective action takes place before the error. **(Note: explanation is optional)**		
d)	**What is cascade control? Explain the 'Master' and 'Slave' with respect to cascade control.**		**04**
Ans	**Cascade control:** In a cascade control arrangement, there are two (or more) controllers arranged in series, where one controller's output drives the set point of another controller. The cascade control has one manipulated variable and more than one measurement. Thus it involves two control loops that use two measurement signals to control one primary variable. There is a secondary control loop located inside a primary control loop. Though two controllers are used, only one process variable is manipulated. The output of the primary loop controller is used to calculate the set point for the inner (secondary) control loop. The output of the secondary controller is	**01 marks for definition** **02 mark for explanation**	

	used to adjust the manipulated variable. Thus the primary controller maintains the primary variable at set point by adjusting the set point of secondary controller. The secondary controller, in turn, responds to the output of the primary controller and to the secondary controlled variable. Thus the secondary controller act as defence against disturbances, which prevents these, upsets from entering the primary process. The controller which uses the set point given by the operator is called the primary, outer, or master controller. The controller which is receiving the set point is called the secondary, inner or slave controller. **Block diagram:** 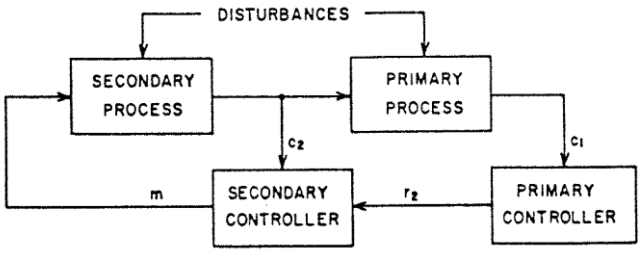 	**01 mark for diagram**	
e)	**State the functionality of Modbus and profibus in DCS.**		**04**
Ans.	**MODBUS:** • MODBUS is a serial communications, application-layer protocol based on client/server or request/reply architecture for process control systems. It was published by Modicon (now Schneider Electric) in 1979. • Modbus is used for Supervisory Control and Data Acquisition (SCADA) type network communication between devices. It is used to connect a supervisory computer with a remote terminal unit (RTU) in SCADA systems. • The Modbus protocol follows a master and slave architecture where a master transmits a request to a slave and waits for the response. It provides up to 247 slaves for one master. Only the master initiates a transaction giving the master full control over the flow of information. For example a system that measures temperature and humidity and communicates the results to a computer. • Here, transmission medium is not defined. The user can therefore choose between RS-232C, RS-422 or 20 mA current loops, all of which are suitable for the transmission rates which the protocol defines.	**02 marks For any 2 points each**	

	PROFIBUS: • The Process *Fieldbus*, PROFIBUS, is a German standard. • Unlike the MODBUS, the PROFIBUS specifies Layers 1, 2, and 7 in accordance with the OSI model. • It provides high-performance communications system for simple, inexpensive equipment. • Its functionality and data transfer capabilities ensure transparency to higher network levels. • Communication with simple field instrumentation with immediate response, master-slave access with central polling and broadcast messages • Simple and economic transmission system, also for international standard applications • Application layer with functions corresponding to the MMS standard ISO IS 9506 • Static, plannable functions for communications and object addressing • PROFIBUS uses a hybrid access method combining a centralized master-slave system with decentralized token passing.		