SUMMER – 16 EXAMINATIONS

Subject Code: **17456** **Model Answer**

Important Instructions to examiners:

1) The answers should be examined by key words and not as word-to-word as given in the model answer scheme.
2) The model answer and the answer written by candidate may vary but the examiner may try to assess the understanding level of the candidate.
3) The language errors such as grammatical, spelling errors should not be given more importance. (Not applicable for subject English and Communication Skills)
4) While assessing figures, examiner may give credit for principal components indicated in the figure. The figures drawn by candidate and model answer may vary. The examiner may give credit for any equivalent figure drawn.
5) Credits may be given step wise for numerical problems. In some cases, the assumed constant values may vary and there may be some difference in the candidate's answers and model answer.
6) In case of some questions credit may be given by judgment on part of examiner of relevant answer based on candidate's understanding.
7) For programming language papers, credit may be given to any other program based on equivalent concept.

Q. NO.	MODEL ANSWER	MARKS	TOTAL
1.	**Attempt any five of the following**	**5*4**	**20**
a)	**Sensitivity:-** Sensitivity refers to the ability of a measuring device to detect small differences in a quantity being measured. The device should not be so sensitive. **Readability:-** Readability refers to the susceptibility of a measuring device to having its indications converted to a meaningful number. A micrometre instrument can be made more readable by using verniers. Very finely spaced lines on a scale become more readable when a microscope is used; but for the unaided eye, the readability is poor. Amplification or the magnification is enlarging the output signals from the measuring instruments, so as to make them better readable.	2m 2m	**04**
b)	**Line Standard:-** According to it, yard or meter is defined as the distance between scribed lines on a bar of metal under certain conditions of temperature and support. These are legal standards and Act of Parliament authorizes their use. It is a very quick and easy process of measurement. Its manufacturing cost is low and process is simple. Scale markings are not subjected to wear but end of scale is worn. Thus, it may be difficult to assume zero of scale as datum. Accuracy of the measurement Limited to + 0.2mm. For high accuracy, scales have to be used along with microscopes. Parallax error may occur. Eg. Yard, meter.	4m	**04**

c)	Marking methods for large size plates **(any one)**:	4m (any 1)	**04**

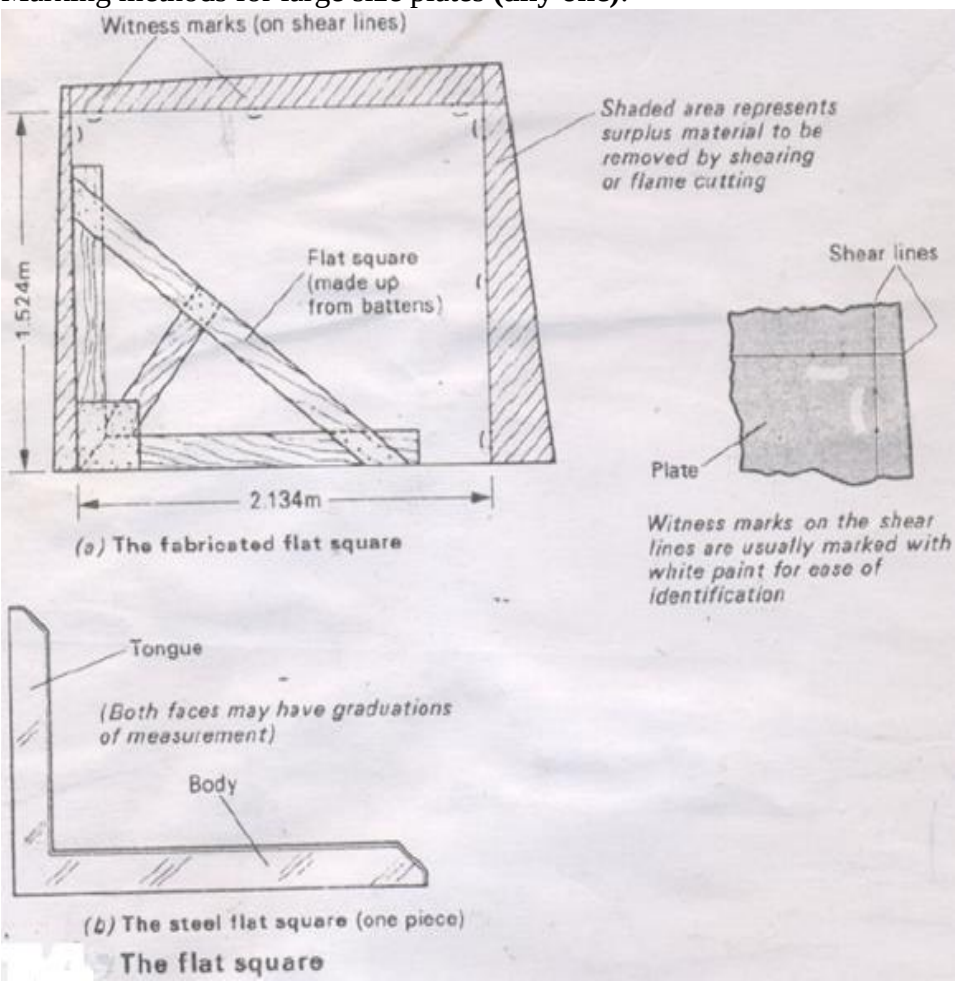

Method1: Use of square and steel tape

A Flat square is used for marking out on large flat surfaces. The flat square differs from an Engineer's try-square in that it is laid on the flat surface of the sheet metal or plate to be marked out. It is larger than the try-square and is made in one piece, consisting of a long arm termed the 'body' and a short arm termed the 'tongue'.

In many fabrication workshops use is made of a simple made-up square of either wood or light gauge steel. A suitable steel tape is used in conjunction with the flat square.

Before commencing to mark out a large plate:

1. Always check for squareness.
2. Where possible, select one straight edge and use as a base datum. Figure1 showed how square and steel tapes are used for marking-off a steel plate for cutting. Figure 2 shows how squareness may be checked.

OR

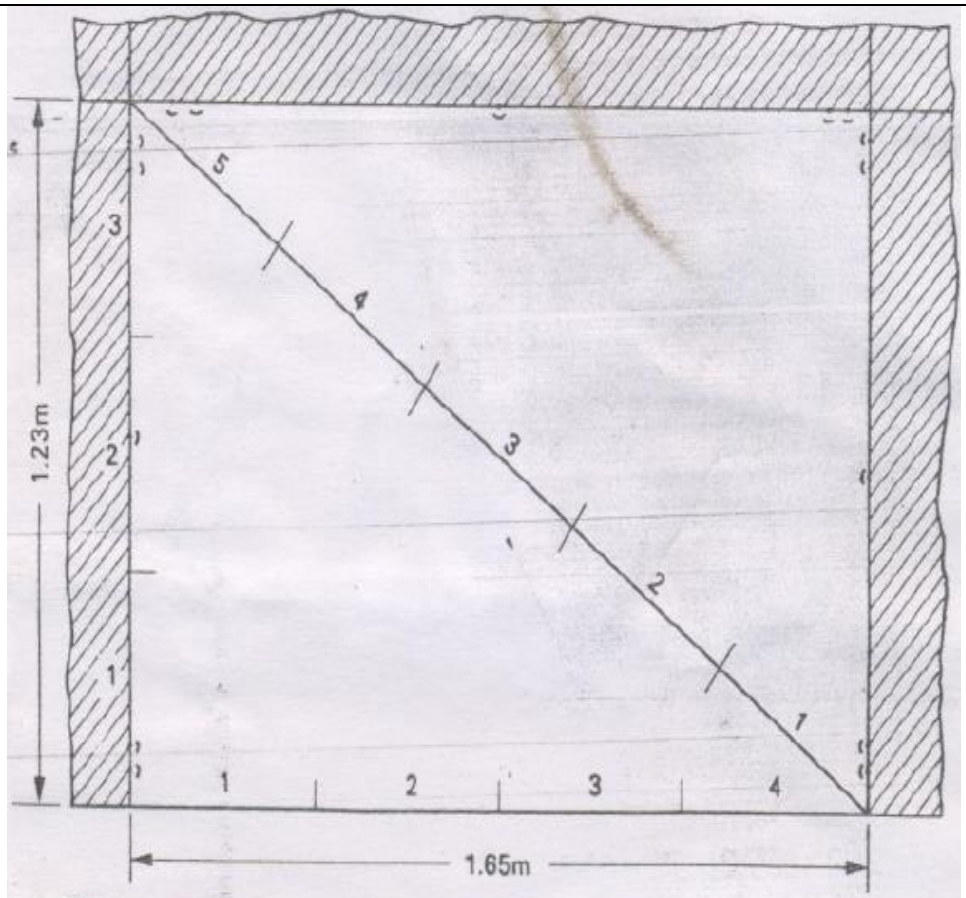

Use of the steel tape for marking off

Method2: Use of steel tape

Figure3 illustrates the use of a steel tape for marking-off a pIate to measure 1.65m by 1.23m. Select one straight edge on the plate for straightness and use as a baseline, otherwise mark a datum line with the aid of a chalkline.

The method employed has been explained in Fig1. In this case a most suitable measurement to be used for the 3:4:5 ratio of the sides of a 90^0 triangle will be 410 mm, giving the following dimensions to be used for the steel tape:

1230 mm (3 x410) : 1640 mm (4 x 410) : 2050 mm (5 x 410)

Once a line has been constructed at 90^0 to the base datum, the dimensions of the sides are measured with the steel tape, the outlines made with a chalkline and witness marked. The outline is checked for true squareness as explained in

Fig2.

Arcs may be swung with a steel tape by holding the French Chalk in the hook at the zero end of the tape.

OR

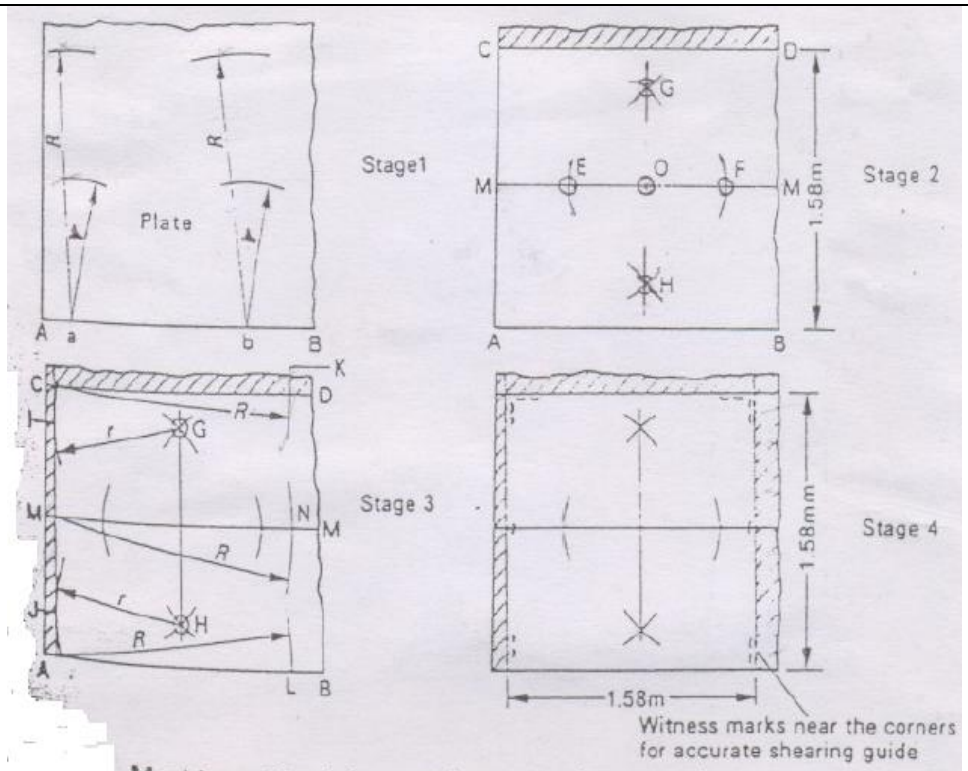

Marking-off with a steel tape and trammels

Method3: Use of steel tape and trammels

Figure4 illustrates the method of marking-off a steel plate which is required to be 1.58 m x 1.58 m with square corners, using a steel tape and trammels.

Stage1;

A suitable straight edge is selected and used as a baseline as shown at A-B. The trammels are set to the full width of the plate (R=1.58m) and with any two points ‘a' and ‘b’ (on the base line A-B) as centres, arcs are struck. With the same centres and the trammels set to approximately half this dimension (radius r) two other arcs are shown struck as in Fig.4

THE STEELTAPE IS USED FOR ALL MEASUREMENTS

Stage 2;

Parallel lines, C-D and 'M-M are marked with the chalkline held tangential to each pair of equal arcs, in turn. A light centre punch mark is made at 0 which is approximately half the width M-M.

From the point O on M-M construct a perpendicular G-H, and mark with the chalkline. Lightly centre-punch mark the points G and H.

The points G, Hand 0 are used to check whether the edges of the plate are straight and parallel to this line of points, to enable use to be made of them.

Stage3;

If both edges prove unsuitable for use, the trammels are set to radius r, and with centres G and H, arcs are struck to provide a suitable shearing margin at points I and J.

The end shear line is made with the chalk line held at a tangent to these arcs.

The plate edge measurements for the length of the plate are made from this

	line (through I and J). The trammels are set to R = 1.58 m, and a chalkline is made at a tangent to the arcs at points K, N and L, as shown in Fig.4 Stage 4; The shear lines are witness marked with a centre punch, and white paint marks are made near them. The finished outline is checked for SQUARENESS by measuring the diagonal lengths.		
d)	Dia:- 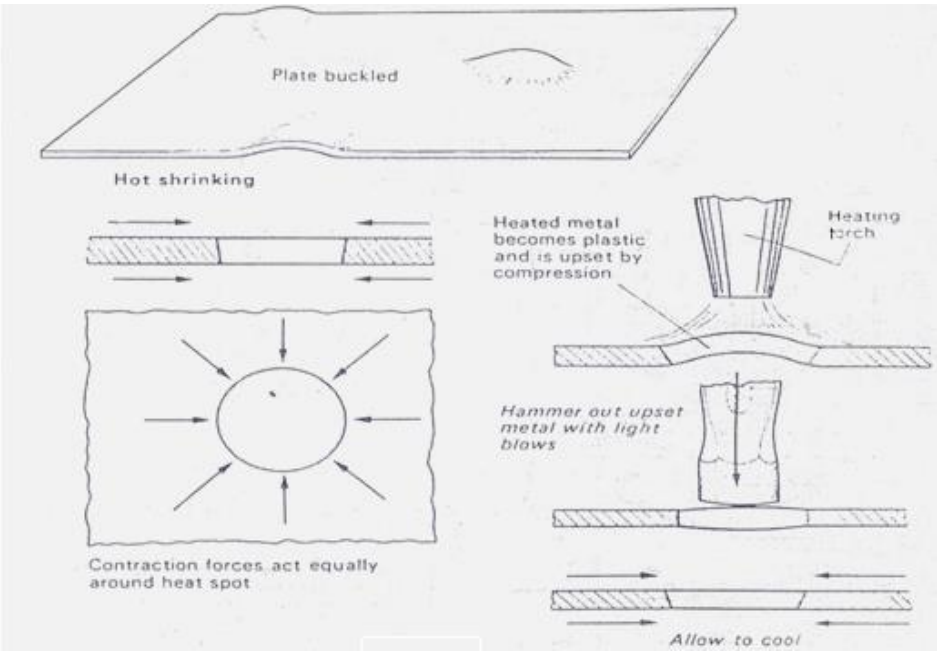 **Explanation:-** First of all the plate to be straightened is heated with the help of a heating torch Because of that the part was localized heated try to contract due to contractional forces are set up in that region. After that with light blows of hammer the metal get upset and the buckled plate becomes straight. As shown in the above fig.	02m (Dia) 2m	**04**
e)	Need for surface coating: 1. Improving the hardness 2. Improving the wear resistance 3. Controlling friction, Reduction of adhesion, improving the lubrication, etc. 4. Improving corrosion resistance **5.** Improving aesthetics look.	4 m (any 4)	**04**

f)	**<u>Shop Method Of Drawing an Ellipse:-</u>** **1) By using an Elliptical trammel:-** 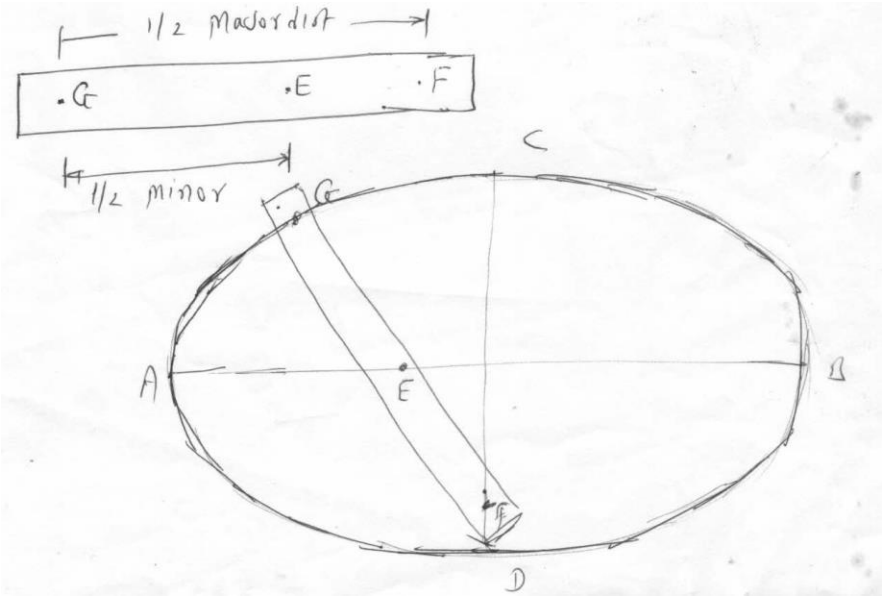 ➢ The trammel method of ellipse construction involves plotting a series of pointer by using a strip of paper, cardboard, plastic and rotating the strip up and down and around horizontal and vertical axes. ➢ The stripes of length of paper or cardstock are a trammel. ➢ The trammel has 3marks, two representing the foci and one representing for ellipse circumference. ➢ Lay out horizontal (AB) and vertical (CD) axes that intersect at right angle. ➢ Determine the minor and major axes and the foci of the intended ellipse. ➢ On a strips or cardstock, lay off distance GE representing half the length of the minor axis and GF represents half the length of major axis. ➢ Set the trammel on the drawing so that E is always traversing AB an F is moving along CD ➢ AB we move the trammel plot points at G which will always indicate the circumference of the ellipse. OR 2) **Shop Method of drawing of an Ellipse:-** Fig shows the method of drawing an ellipse with the help of string; therefore it is called string method. For this string method one should require Flat Square, measuring tape, string, nails, pins, pencil.	02 marks (dia.) & O2 m for explain (any 1 method)	**04**

	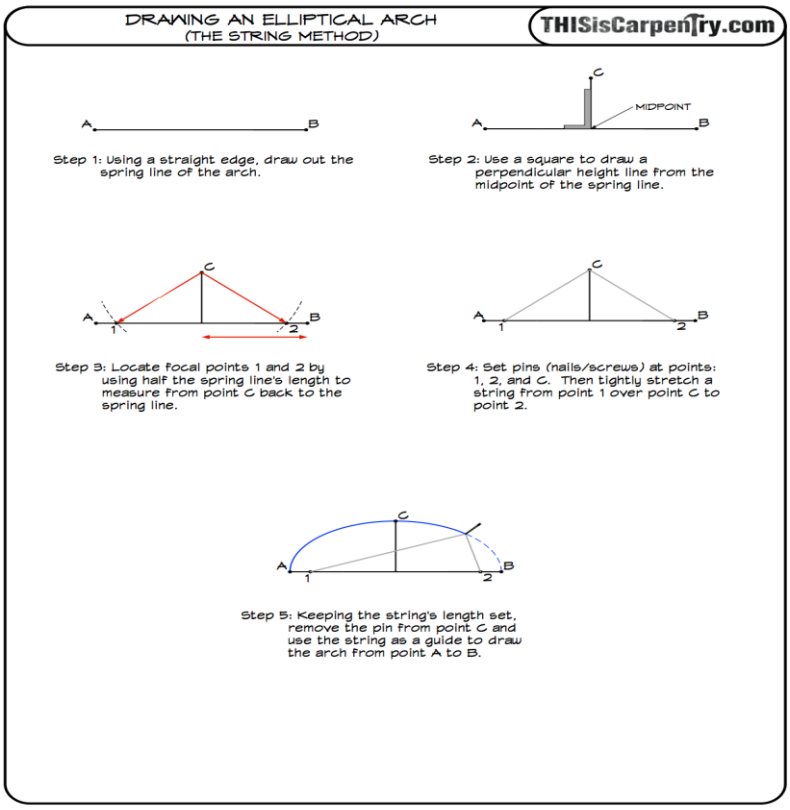 Using a straight edge draw the desired length of ellipse which is equals to major axis. Use a flat square to draw minor axis. It should be perpendicular to the major axis & pass through center point. Locate focal points 1& 2 by using half the length of major axis. Fix pins, nails, screws at point 1 & 2 and a pencil at point C, and then tightly stretch a string around the three points and ends together. Keeping string length constant operate the pencil from point C and use the string as guide to draw the ellipse.		
g)	Scriber Compass and pencil Protractor, tri square beam trammels with steel tapes, bevel, pipe square, scratch gauge, centre punch, dot or nipple punch, etc.	04 Marks (any4)	**04**

2.	**Attempt any FOUR of the following**	**4*4**	**16**
a)	Need of templates: There are several reasons for the use of templates on paltering the sheet metal and plate fabrication industries for e.g 1) To avoid repetitive marking of the same dimension where a no of identical parts or article are required. 2) To avoid unnecessary wastage of material. Very often when marking a large size plate from the information given on a drawing it is almost impossible to anticipate exactly where to begin in order that the complete layout can be economically accoodated. 3) To act as a guide for a cutting process. 4) As a simple means of checking bend angles and contours during for mining and rolling operation. 5) As a precise method of marking of holes position on sheet metal fabrications, plate work, structures work such as angles, channels, columns and are arms.	04 m (any 4)	**04**
b)	**Essentials of plant layout:** An efficient factory layout is one that can be instrumental in achieving the following objectives; a) Proper and efficient utilization of available floor space b) To ensure that work proceeds from one point to another point without any delay c) Provide enough production capacity d) Reduce material handling cost e) Reduce hazards to personnel f) Utilize labor efficiently g) Increase employee morale h) Reduce accidents i) Provide for volume and product flexibility j) Provide ease of supervision and control k) Provide for employee safety and health l) Allow ease of maintenance m) Allow high machine or equipment utilization n) Improve productivity	04 m (any 4)	**04**
c)	**Sources Of Error:-** **1) Human Error:-** • These class of error mainly covers human mistakes in reading instrument , recording and sometimes while calculating measurement results. • The experiment or may misread the scale because of parallax error. • The responsibility of mistakes lies with the experimenter. 2) **Systematic Error:-**	4m (any 2)	**4**

	A) Instrumental error:- • This error may occur due to inherent shortcomings in the instrument because of mechanical structure. • Sometimes because of friction in the moving parts of instruments will give wrong reading • Because of misuse of instrument. B) Environmental error:- This error may be occurred due to surrounding conditions may be because of change in temperature, pressure, humidity, vibration or external magnetic or electrostatic field. **3) Random errors:-** This error occurs randomly and specific cause of such error cannot be determined but sources of these types of errors are small variation in the position of setting standard and work piece.		
d)	Composite material has following constituents:- **1) Matrices:-** Polymers are common matrices (especially used for fiber reinforced plastics). Road surfaces are often made from asphalt concrete which uses bitumen as a matrix. Mud (wattle and daub) has seen extensive use. Typically, most common polymer-based composite materials, including fiberglass, carbon fiber, and Kevlar, include at least two parts, the substrate and the resin. **2) Reinforcement:-** Reinforcement usually adds rigidity and greatly impedes crack propagation. Thin fibers can have very high strength, and provided they are mechanically well attached to the matrix they can greatly improve the composite's overall properties. Fiber-reinforced composite materials can be divided into two main categories normally referred to as short fiber-reinforced materials and continuous fiber-reinforced materials. Continuous reinforced materials will often constitute a layered or laminated structure. The woven and continuous fibre styles are typically available in a variety of forms, being pre-impregnated with the given matrix (resin), dry, uni-directional tapes of various widths, plain weave, harness satins, braided, and stitched.	4m	**4**

e)	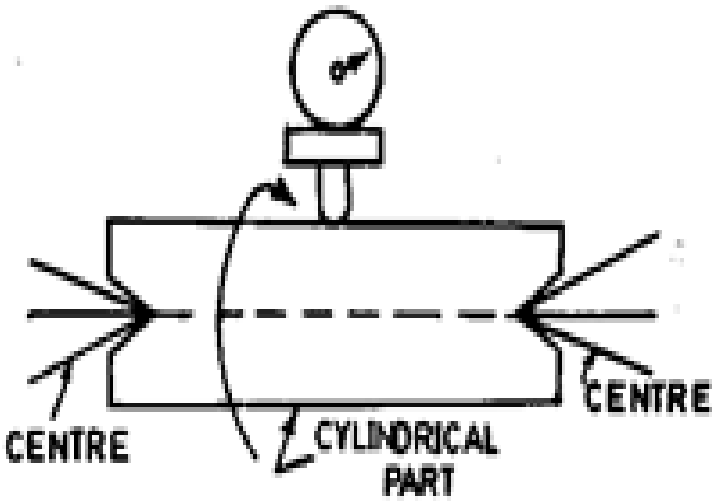 Some parts, (such as shafts) may be inspected for roundness while mounted on centers. In this case, reliability is dependent on many factors like angles of centers, alignment of centers, roundness and surface condition of the centers and center holes, and run out of piece. Out-of-straightness of the part will cause a doubling run out effect and appear to be roundness error. Any or all of these factors may combine, creating a high degree of uncertainty as to exact nature of the error.	2m (dia) 2m	**4**
f)	**Dia:-** 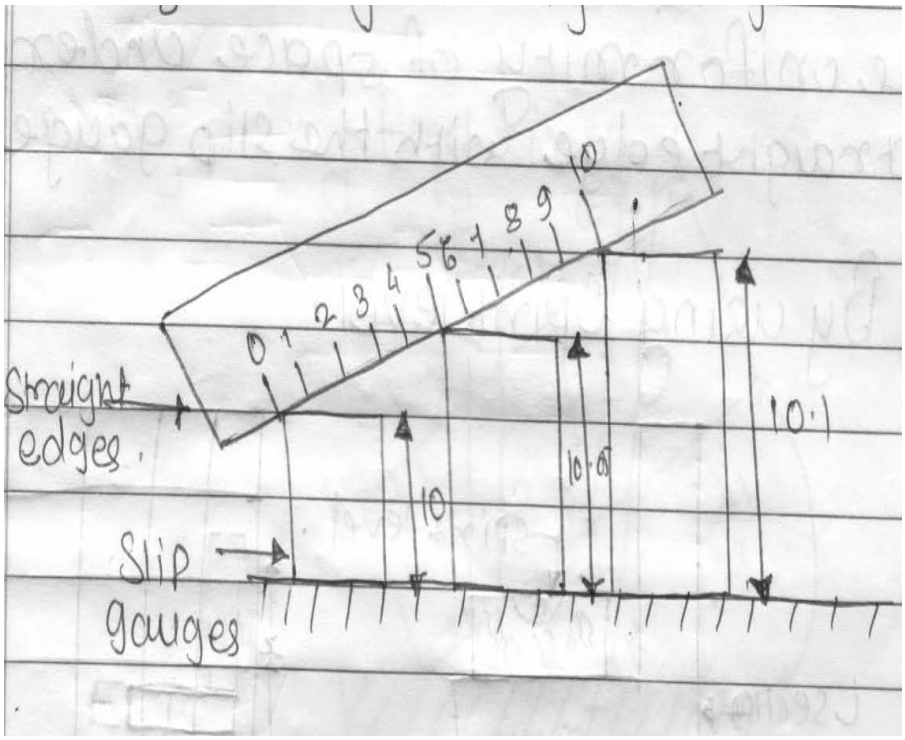	2m	**4**

	Working:- A straight edge is a measuring tool which consists of a length of steel of narrow and deep section so as to avoid bending of that rod. For(Changing the)checking the straightness edge is taken on the slip gauges and two are vivid again the light which clarify indicates the straightness. If this two surfaces are perfectly straight the there is a negligible gap. If the detraction of light is red in colour a gap of 0.0012 to 0.0017mm and if the detraction if light is blur in colour the gap is approximately 0.0075mm. More accurate method is support the straight edges on equal slip gauges at the correct points for minimum deflection sand measurement the uniformity of space under the straight edge with slip gauge. In the above figure the staright edge is supported on the slip gauges at several points and with the help of that we can conclude the surface is perfectly flat or not.	2m	
3.	**Attempt any <u>FOUR</u> of the following**	**4X4**	**16**
a)	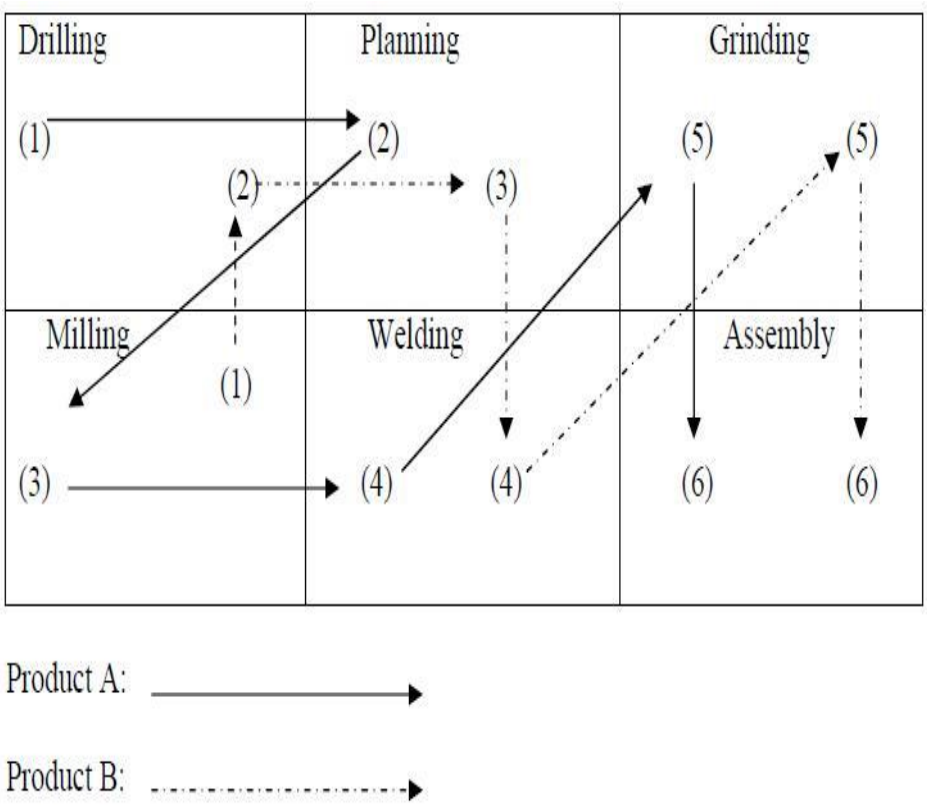	02m (dia)	**04**

	Working:- In this type of layout machines of similar type are arranged together at one place. e.g. Machines performing drilling operations are arranged in the drilling department, etc. The job/s move from one department to another without creating bottlenecks. The distance between departments should be as short as possible for avoiding long distance movement of materials The arrangement should be convenient for inspection and supervision. The important advantage is that if any of the machine breaks down the whole production will not stop.	02m	
b)	Description of processes: A brief description of each process with neat sketches is as follows; • Prepegging --- It involves the application of formulated resin products, in solution or molten form, to a reinforcement such as carbon, fibreglass or aramid fibre or cloth. The reinforcement is saturated by dipping through the liquid resin. In an alternative method called a Hot Melt Process the resin is impregnated through heat and pressure. The Hot Melt System uses resins with a very low percentage of solvents. 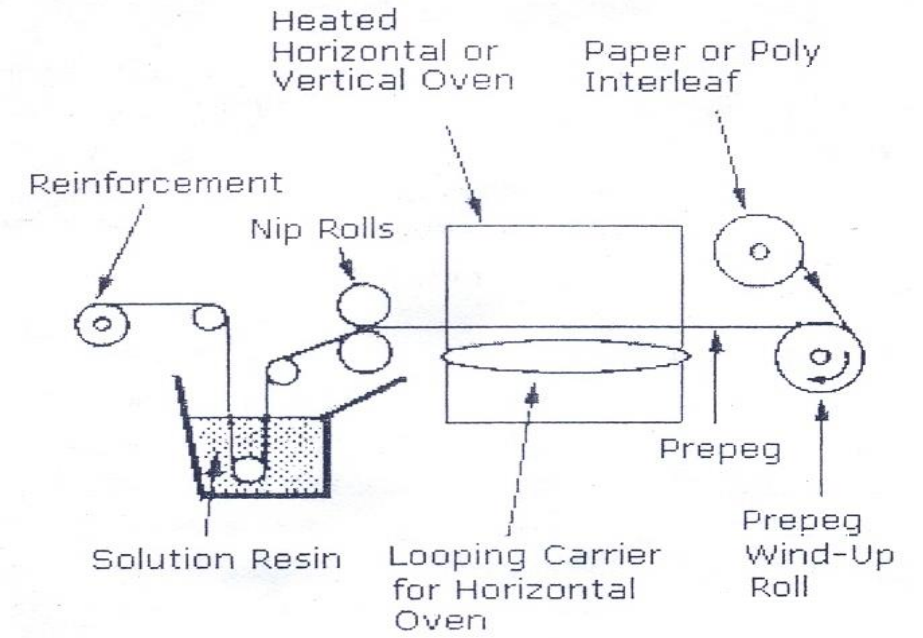 **OR** • Wet filament winding --- In this process, continuous fibre reinforcement materials are drawn through a container of resin mixture and formed onto a rotating mandrel to achieve the desired shape. After winding, the part is cured in an oven. This process can also be used as preimpregnated fibre tows called towpregs.	04 marks (any 1 method) 02 marks	**04**

(diag.)

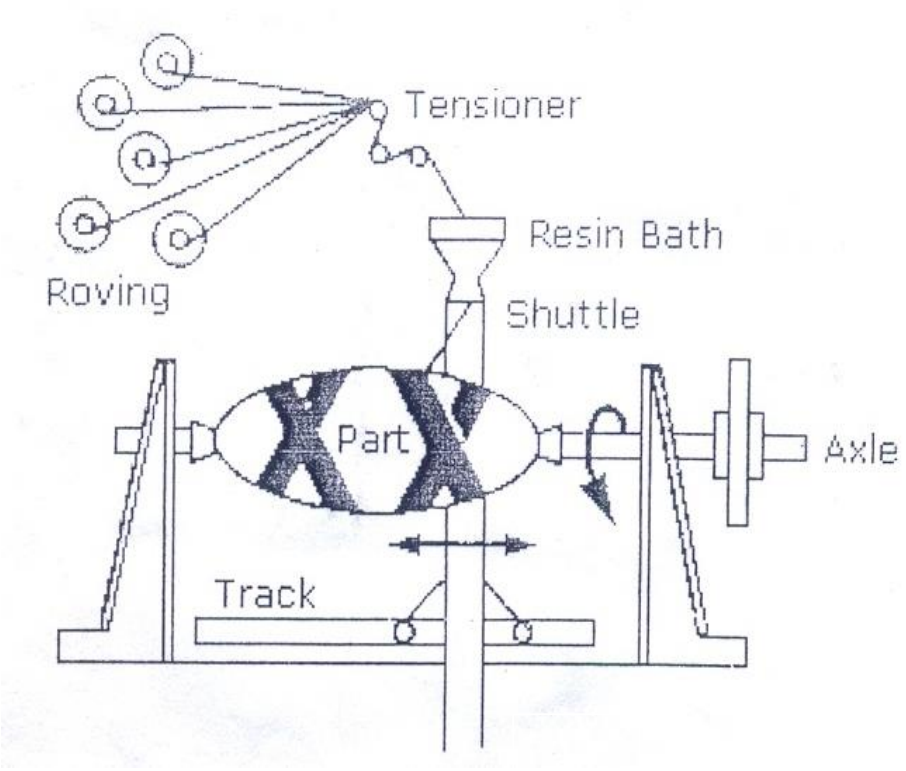

OR

- Hand lay-up or contact moulding --- This involves coating a mould or form with a layer of resin; a layer of glass reinforcement is applied, and the reinforcement is thoroughly saturated with resin. The process is repeated until the desired composite thickness is achieved (the maximum thickness is usually 9mm). The polymer matrix is usually a polyester or epoxide.

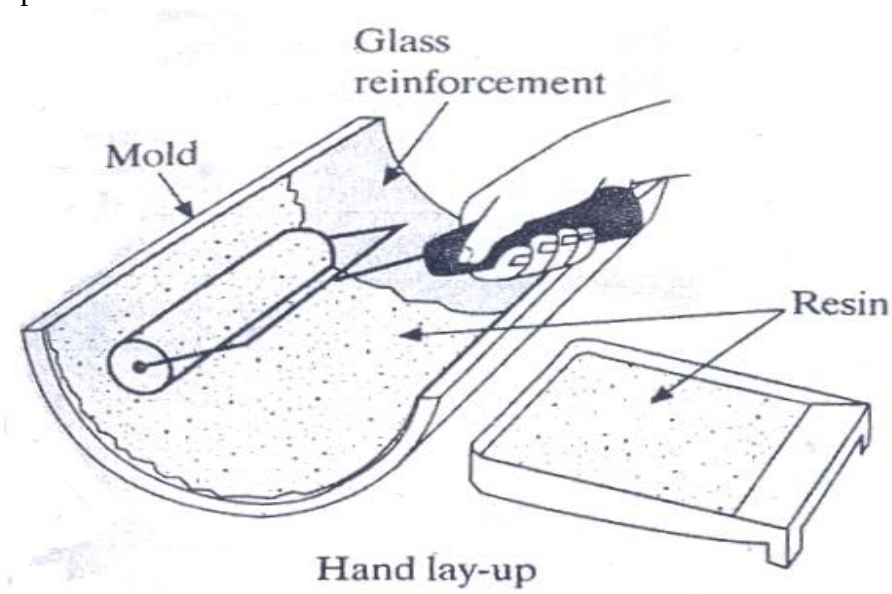

OR

- Compression moulding --- It is similar to the process described for unreinforced thermosets, except that special techniques are required to introduce the glass reinforcement into resins that have to be catalyzed and have a limited pot life after catalyzation.
  In the sheet moulding process, catalyzed polyester or epoxy resin is kneaded into the glass reinforcement by rollers. Special fillers are added to keep the resin from being tacky and inhibitors are added to increase the pot life of the catalyzed resin. The finished sheet, called sheet moulding compound (SMC), consists of resin and reinforcement and this sheet can be cut to an appropriate size and pressed in a matched mould to make the finished part. The moulds are heated to complete the cross-linking of the resin.
  A similar product, called bulk moulding compound (BMC), is produced by adding thickeners to the resin; it is kneaded like dough with chopped fibres to make a compression moulding charge that resembles a glob of dough. The heating and pressing are the same as in sheet moulding.
  Both processes can be used for large mouldings such as automobile fenders.

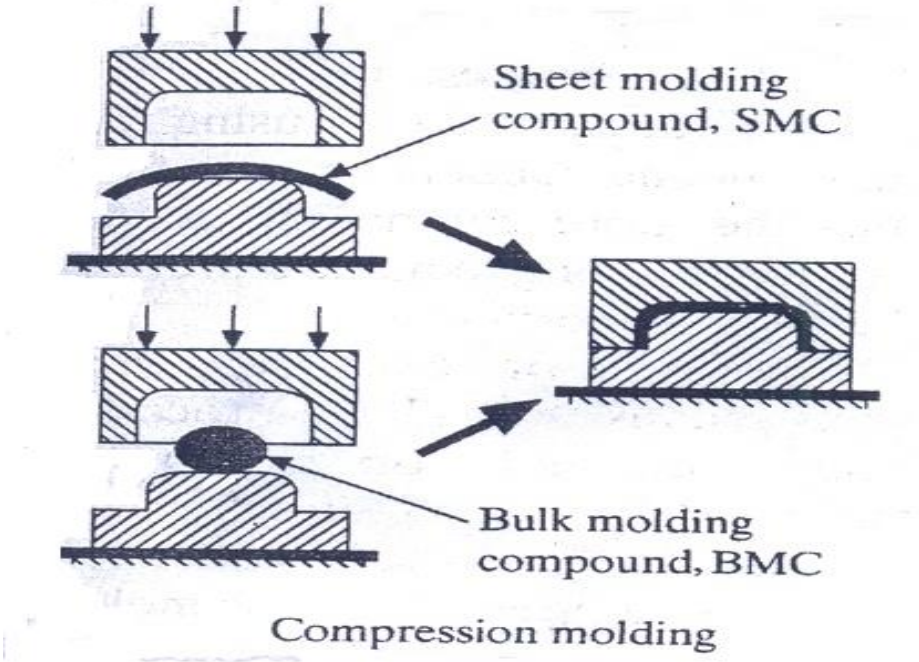

OR

- Resin transfer moulding --- This process has evolved as a way to speed up contact and to improve the part by having two finished surfaces instead of one. This process requires a close fitting mould. Glass reinforcement is cut and shaped to the desired thickness in the open mould. The mould is then closed and evacuated and catalyzed resin is

pumped into the bottom of the mould. When the mould is filled, the pump is shut off, the resin line is stopped off and the part is allowed to cure. This is becoming an important process for the production of large RTP boats. It is replacing hand lay-up.

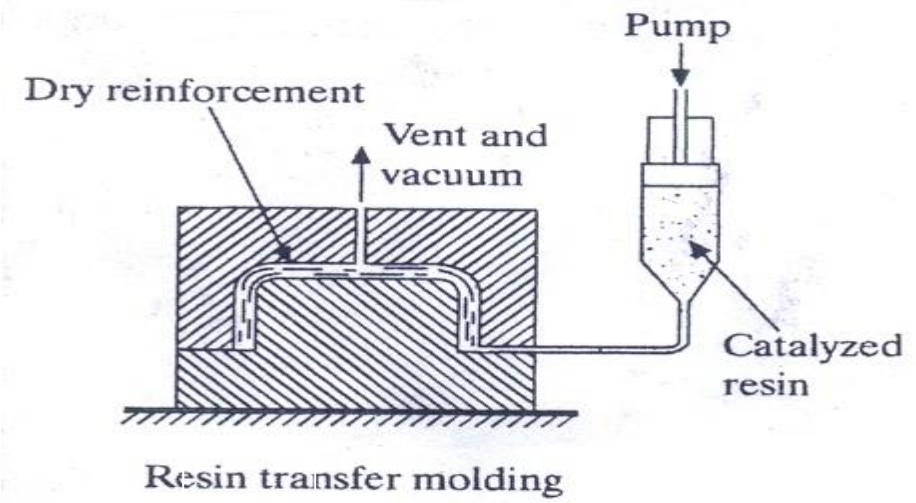

Resin transfer molding

OR

- Continuous pultrusion --- It is a process for making glass-reinforced shapes that can be generated by pulling resin-impregnated glass strands through a die. The glass is pulled through a resin bath; it is shaped as it goes through a heated bath and the resin cross-links in the heated die and combined curing section. Pipes, channels, I-beams and similar shapes can be generated. Pultrusion structural shapes are frequently used for decking and structural members around corrosive chemical tanks.

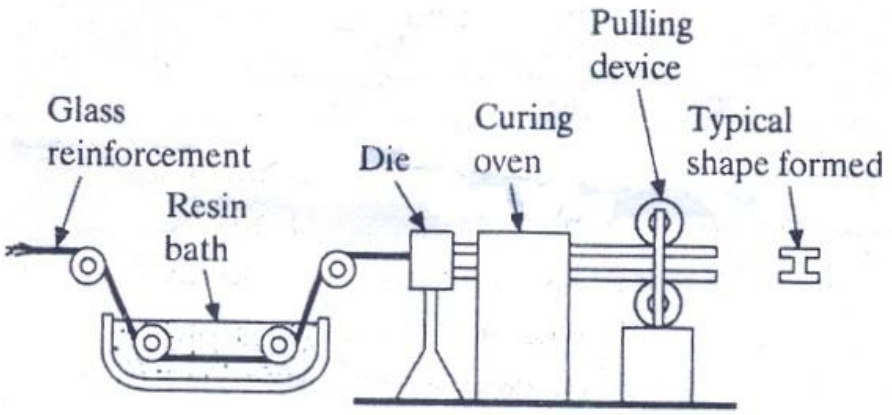

Continuous pultrusion

OR

- Chopped fibre spraying --- It performs the same job as hand lay-up, but it is much faster. Two component resins are mixed in a hand-held gun and

sprayed at a mould surface. A chopper is incorporated in the gun. It chops continuous strands of glass into short lengths to act as reinforcement in the composites. This process can be used to make large reinforced composites such as boats, shower stalls and bathtubs. Chopped fibre reinforcements, however are not as strong as hand lay-ups that are reinforced with mat or woven roving.

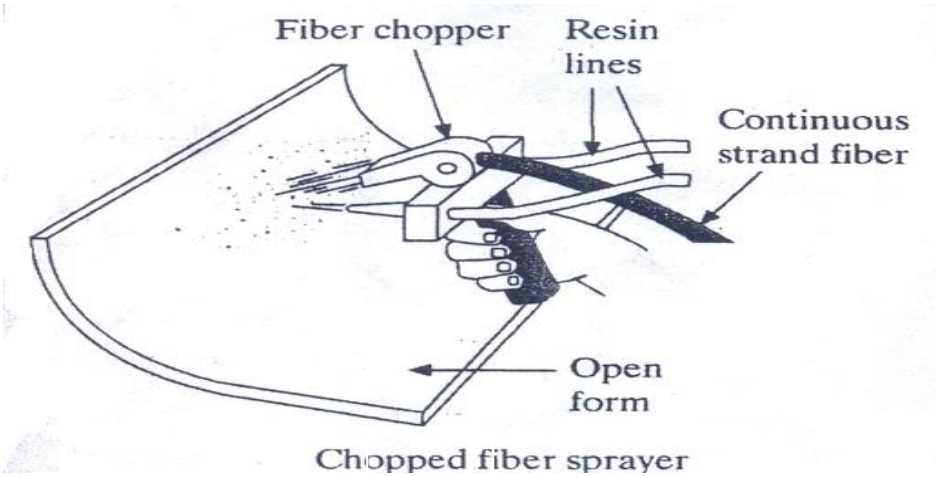

OR

- Vacuum bag forming --- It is used to shape sheet moulding compounds to complex shapes. This process uses atmospheric pressure to do the forming, thus eliminating the high cost of matched metal moulds. It is possible to cure the SMC in the vacuum bag rig using temperature-resistant silicone rubbers for the forming bladder, but the more common practice is to use vacuum-bag forming to make a preform and cure the preform in another mould.

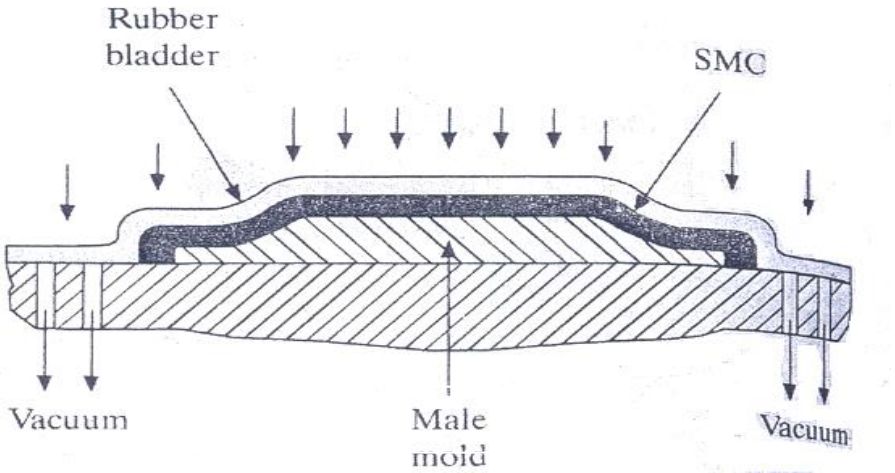

OR

- Injection moulding --- Chopped fibres and particulate reinforcements are blended into the moulding pellets/granules. However this method is not normally used in PMC processes due to fibre damage in the plasticating barrel. Thermoplastic granules are fed via a hopper into a screw-like plasticating barrel where melting occurs. The melted plastic is injected into a heated mould where the part is formed. This process is often fully automated.

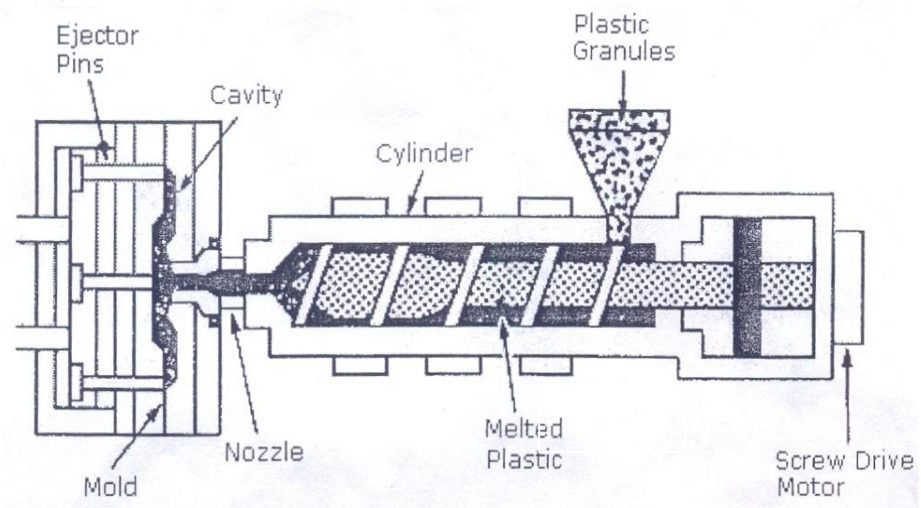

OR

Joining Composites:
Introduction: In any product, there are generally several parts or components joined together to make the complete assembly. These parts are interconnected with each other to make the final product. The purpose of the joint is to transfer loads from one member to another, or to create relative motion between two members.
Joints are but usually avoided in a structure as a good design policy. In any structure, a joint is the weaker area and most failures emanate from joints. Because of this, joints are eliminated by integrating the structure.
In an ideal product, there is only one part. Fibre-reinforced composites provide the opportunity to create large, complicated parts in one shot and reduce the number of parts in a structure.
There are two types of joints used in the fabrication of composite products:
• Adhesive bonding
• Mechanical joints
Adhesive bonding is the more common type of joint used in composites manufacturing.
In adhesive bonding, two substrate materials are joined by an adhesive. Mechanical joints for composites are similar to the mechanical joints of metals. In mechanical joints: rivets, bolts and / or screws are used to form the joints. Fusion bonding is also used for joining purposes. It is used to join thermoplastic parts by means of heat.

	The figures below show an application in which a composite tube is joined with a metal end by various means 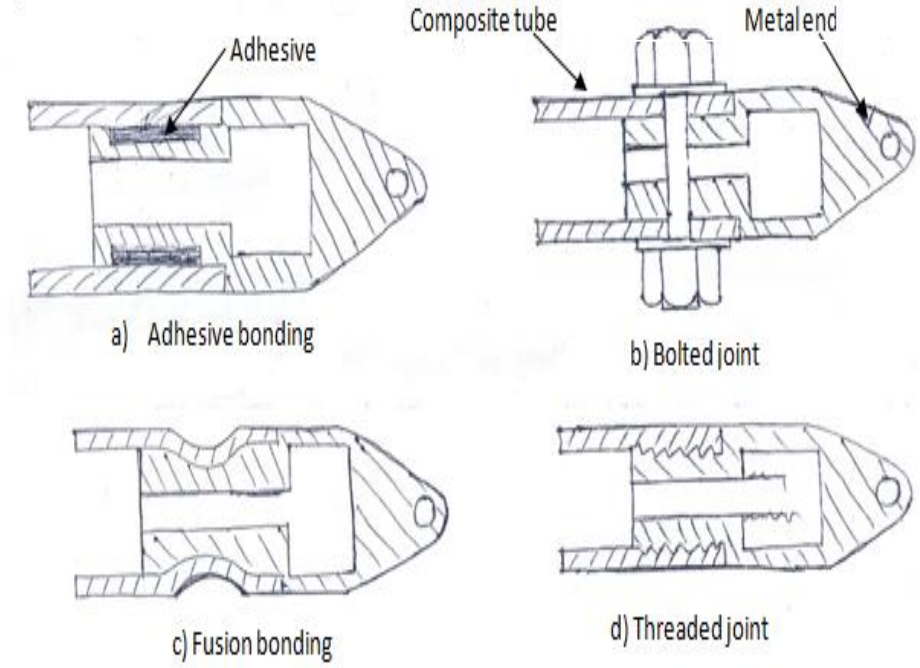 		
c)	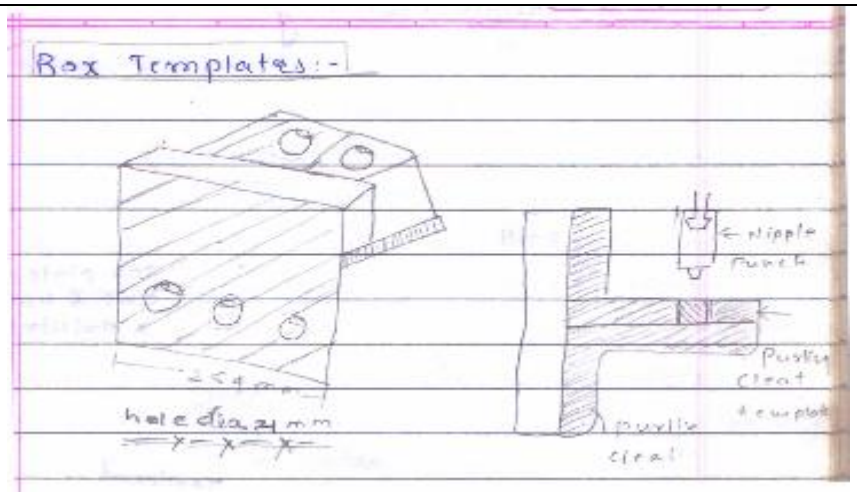 These are made from wood & simply two flanged template fastened together. they are used for marking up longitudinally structural member. The hole positions are marked on the box template to standard dimensions as per the drawing & drilled. Whwn marking OFF holes from a box template the nipple punch Is used.	02m (dia) 2m	**04**

d)	Chemical Cleaning (Removal of Oxide Scales and Surface Defects): Chemical cleaning is divided into two distinct groups: • Organic solvent based • Alkaline and acid aqueous method Emulsifiable Solvent and Emulsion Cleaning The component is either sprayed or immersed in an organic solvent which contains emulsifying agents. After comprehensive coverage, the component is rinsed with water to emulsify the solvent together with contaminating oil or grease. Another advantage is that treatment is usually at ambient temperature, although cleaning efficiency is directly related to physical agitation over the component surface during the water rinsing stage. Alkaline and Acid Cleaners Alkaline cleaners are the most extensively used chemical cleaners for substrate pre-treatment, primarily on grounds of economics, safety, and resistance of steels to attack. They are also commonly used before metal undergoes conversion coating. The degree of alkalinity is known to effect phosphate conversion coatings (particularly zinc), with higher the pH, coarser the resulting crystal structure. In general, a finer structure is preferred for improved mechanical strength of the phosphating and gloss of the applied powder coating. Acid cleaners have a relatively restricted application, limited to mainly light rust removal. They are generally inefficient for oil and grease removal, and if the component is soiled as well as rusty, then acid cleaning is usually a follow-on to solvent or alkaline.	4m	**4**
e)	**Dia:-** 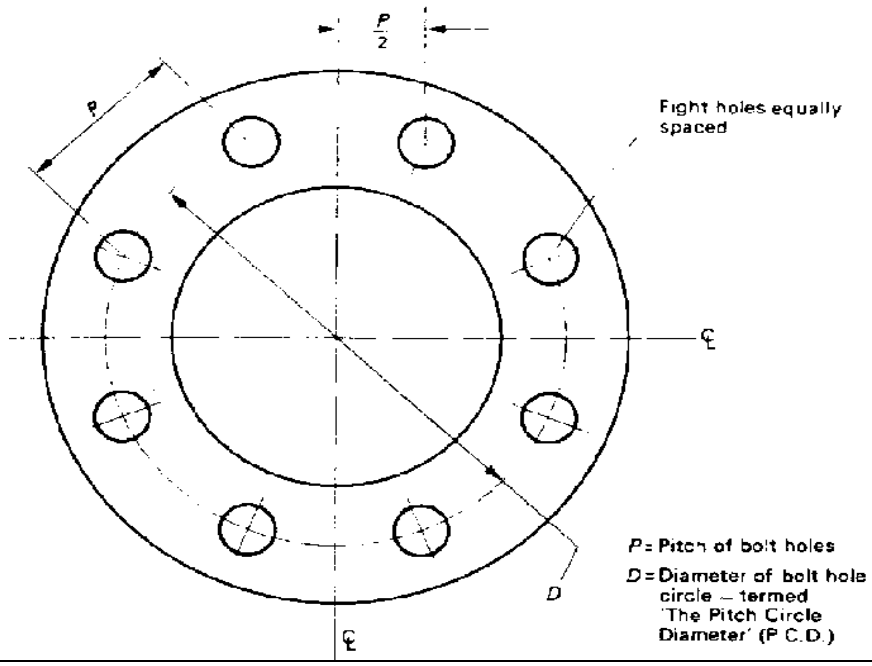 	2m (dia)	**4**

	Description:- • Many fabrication such as boilers, chemical plant, pressure vessels incorporate the use of flanged inlet & outlet, pipes of various diameters are connected by means of flange. • The flanges are welded and connections are made by bolting. • Fig shows a flange with 8 holes lies on circle which is known as pitch circle. • Note that bolt holes never lie on the vertical center line because there is more chance of failure of the lowest bolt. • The distance between adjacent holes is referred as pitch. If 8 holes are to be drilled on a pitch circle of 406 mm then pitch of adjacent holes may be calculated as follows:-	2m	
f)	**Marking off holes in angle sections:** 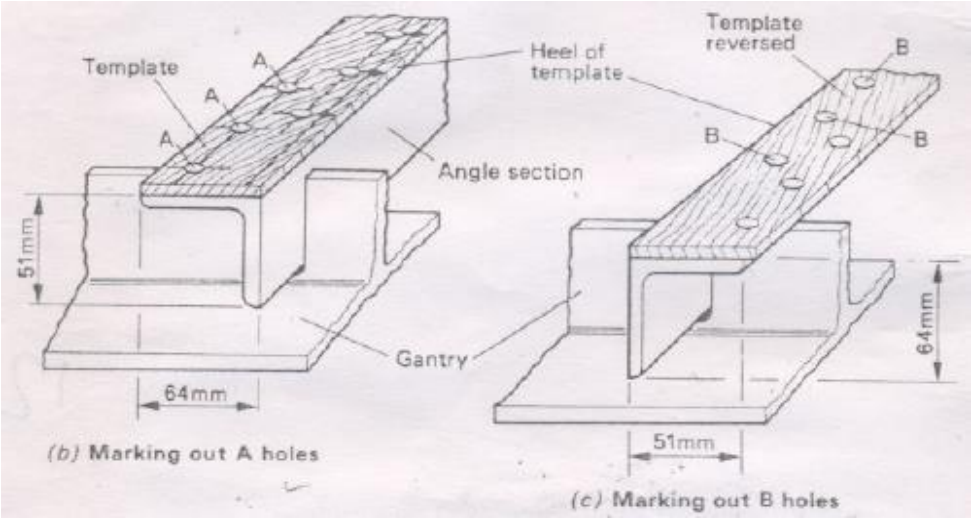 **Description:-** Angle sections are cut to the required length placed on a simple gantry with the web horizontal. The wooden template is kept so that the hill line of the template matches with the hill line of the Angle section at the uppermost portion. The hole positions are marked through the template with a nipple punch as shown in the fig. Afterwards the angle section is tilted and the tail holes are marked with the help of template.	2m Dia 2m	**4**

4.	Attempt any two of the following	2*8	16
a)	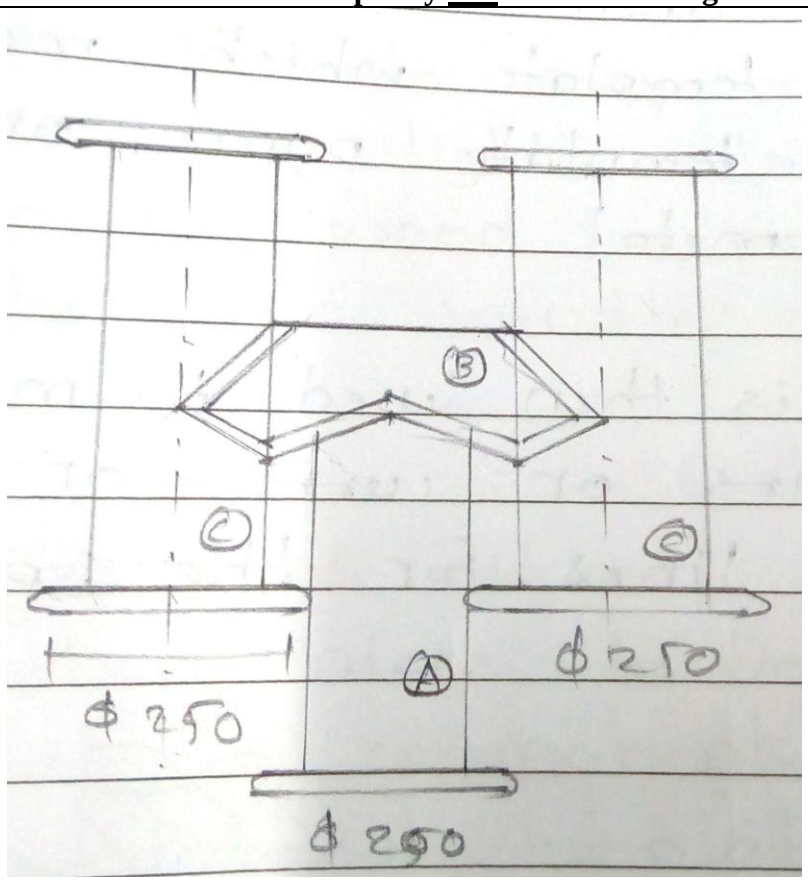 Tinplate or light-gauge sheet steel and template-making papers are the materials most commonly used when making templates or PATTERNS for sheet-metal fabrications. For economy reasons, many patterns are developed half-full-size or to scale from the drawing and then the information contained on them is transferred to full-size dimensions when the craftsman marks it off on the job 'in the flat'. Very often, on precision sheet-metal details, the job is marked off from a scale drawing which provides co-ordinates with precise dimensions marked on them. With many sheet-metal developments it is only necessary to use part patterns which are lined up with DATUM LINES. 'Patterns' are used to mark out sheet metal prior to cutting and forming operations. For example, a smoke-cowl is made out of 1.2 mm-thick mild steel. The edges of the open ends are wired with 3.2 mm-diameter wire. The connection flanges are 12 mm for spot welding, and the side seams are 6 mm grooved. The completed assembly is hot dipped galvanised.	04 Marks (dia) 4m	**08**

	Basically, this component is a combination of 'Tee'-pieces between cylinders of equal diameter, and only requires a part template which may be made from template paper or light-gauge sheet metal. This is then used to mark-out the contours of the intersection joint lines for the parts 'A', 'B' and 'C' whose developed sizes are marked-out in the flat with the appropriate DATUM LINES.		
b)	**PLANT LAYOUT:-** It is a systematic arrangement of all the physical arrangements such as machines, furniture, equipment etc. so as to have maximum production in least time and with minimum material handling. **APPLICATIONS OF PLANT LAYOUT:-`** 1) Plant layout is applicable to all types of industries or plants. Certain plants require special arrangements which, when incorporated make the layout look distinct form the types already discussed above. Applicability of plant layout in manufacturing and service industries is discussed below. In case of the manufacturing of detergent powder, a multi-storey building is specially constructed to house the boiler. Materials are stored and poured into the boiler at different stages on different floors. Other facilities are also provided around the boiler at different stations. 2)Another applicability of this layout is the manufacture of talcum powder. Here machinery is arranged vertically i.e. from top to bottom. Thus, material is poured into the first machine at the top and powder comes out at the bottom of the machinery located on the ground floor. 3)Yet another applicability of this layout is the newspaper plant, where the time element is of supreme importance, the accomplishment being gapped in seconds Here plant layout must be simple and direct so as to eliminate distance, delay and confusion. There· must be a perfect - coordination of all departments and machinery or equipment, as materials must never fail.	02m 6m (2m for each applicati on)	**08**
c)	**Dia:-** 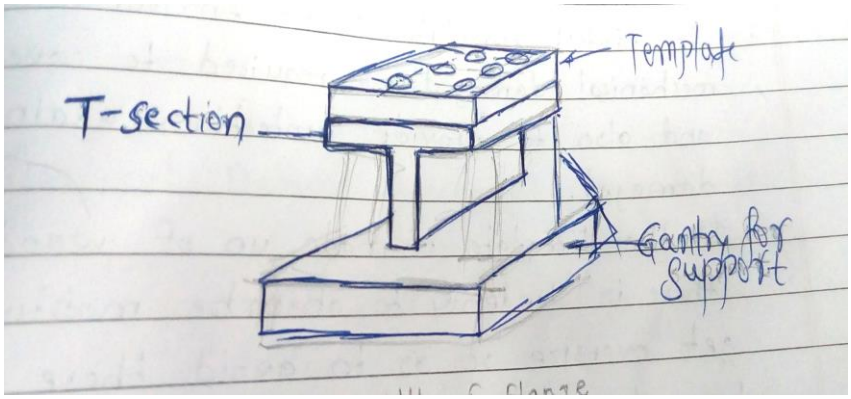	04 marks (dia)	**08**

	Description:- • One bottom template is generally used to mark off hole position on both flange and web. • Before applying template centre line representing half the thickness of stock is marked with French chalk on both ends of T-section. • The template with the instruction uppermost is laid on the surface of flange with the centre line aligned with centre line marked on T-section. • The holes are ben marked with the help of a nipple punch. • Once the hole are been marked the T-section will be tilted the web will be on uppermost position with the help of template mark of holes on web position.	4m	
5.	**Attempt any FOUR of the following**	**4*4**	**16**
a)	**Use of heat strips:** The figure below shows the use of heat strips for the 'hot straightening' and 'hot shrinking' of plate and wide sections. The shrinking forces will be approximately equal for both sides of the plate. The figure above shows the application of a heat strip which, upon cooling, causes the metal to become compressed, because the contraction forces come in at right angles to the strip. Heating is commenced at one end of the strip, making sure that the correct heat goes right through the plate (cherry red 750°C). The whole heating operation is a continuous one, employing a zigzag movement of the heating torch towards the opposite end. On cooling the plate will be shorter in length in the locally heated area. The length and width of a particular heat strip can be determined by the thickness of the plate. As a general guide: for thicknesses from about 10mm to 30mm, the width of the heat strip should be between 20mm and 30mm, the length of the heat strip between 130mm and 200mm.	02 marks	**04**

	Dia:- 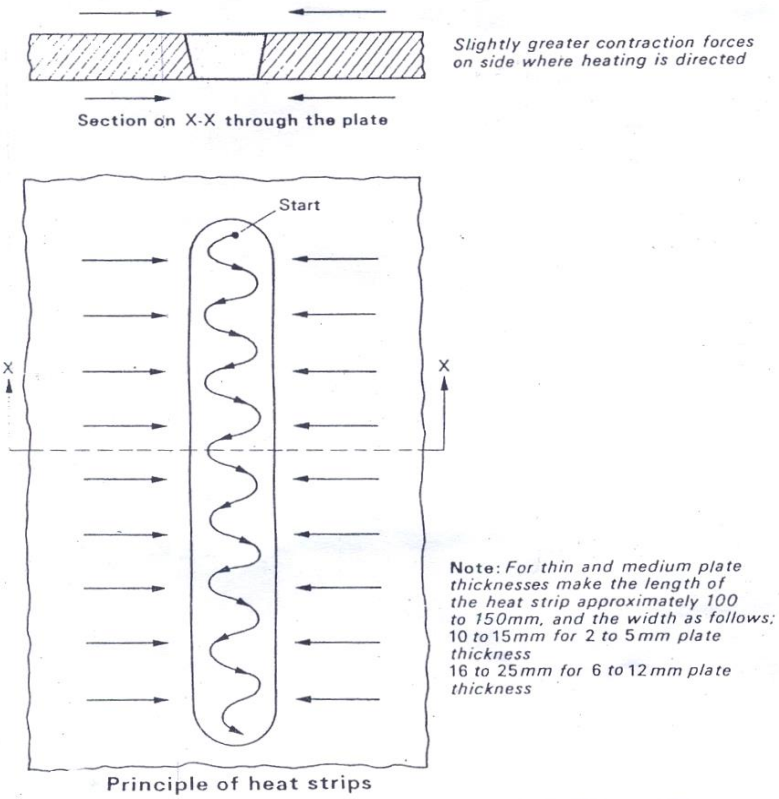 	02 marks (dia.)	
b)	Dry processes of surface cleaning: i) Thermal degreasing: Work pieces soiled with oil are blow dried with hot air at a temperature of about 250^0C. This degreasing principle is based on the evaporation of oil by correspondingly applying energy. The oil vapors are subsequently condensed and separated from the laden air. Following processing, the oils can be reused in production (recycling rate up to 80%). **OR** ii) Vacuum thermal degreasing: Before heating the work pieces, the system is evacuated to less than 1mbar and the pressure then increased again with N_2. After heating in conjunction with extensive inerting, the oil is evaporated in a vacuum of approximately 10 mbar at a temperature of 150^0C to 200^0C. The oils are condensed and can be reused. **OR** iii) Degreasing with CO_2: Supercritical CO_2 has been used successfully for many years in the food and pharmaceutical industries for the purpose of solvent – free dry extraction. Work pieces are cleaned with super – critical	4m	**4**

	CO_2 in high pressure systems at approximately 500 bar and an operating temperature of 190^0C		
c)	**IMPORTANCE:-** Plant layout is an important decision as it represents long-term commitment. An ideal plant layout should provide the optimum relationship among output, floor area and manufacturing process. It facilitates the production process, minimizes material handling, time and cost, and allows flexibility of operations, easy production flow, makes economic use of the building, promotes effective utilization of manpower, and provides for employee's convenience, safety, comfort at work, maximum exposure to natural light and ventilation. It is also important because it affects the flow of material and processes, labours efficiency, supervision and control use of space and expansion possibilities etc.	04 m	**4**
d)	The following figures show the methods of stiffening sheet metal components;  a)Little rigidity --- A flat sheet metal panel possesses little rigidity 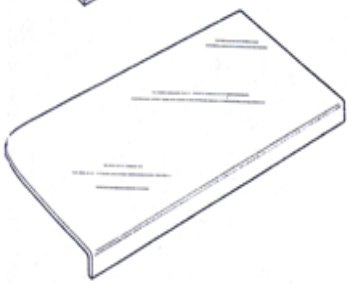 b)Strength and rigidity --- This can be imparted to the panel by making right-angled folds along the two longest edges	2m (any 1 dia) & 2m for explanation	**4**

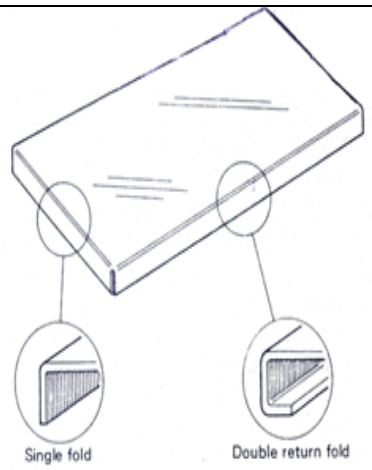

c)Greater strength and rigidity --- This can be imparted to the panel by folding all four edges. Greater strength has been given to the longest sides of a double fold

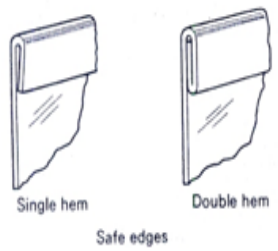

d)Return fold or single hem --- The raw edge of a sheet metal may be stiffened and at the same time made safe by means of a return fold or single hem

e)Double hem --- Greater stiffness is achieved by folding a double hem

The stiffening of large panels is shown in the figures below;

A large sheet metal panel may be stiffened with all four edges made rigid by folding. 'Top hat section' is used to stiffen the centre section of the panel and is usually secured in position by spot welding.
Another method of stiffening large sheet metal panels is to attach them to a rigid frame-work. The welded frame is fabricated from lengths of 'P-section' which has a very high Strength/weight ratio for a sheet metal section. All four edges of the panel are folded at 90° to a suitable width. The panel is then placed in position over the frame and the edges 'paned-down' over the flange on the 'P-section'. The centre of the panel is stiffened by means of a diagonal top-hat section.

e)	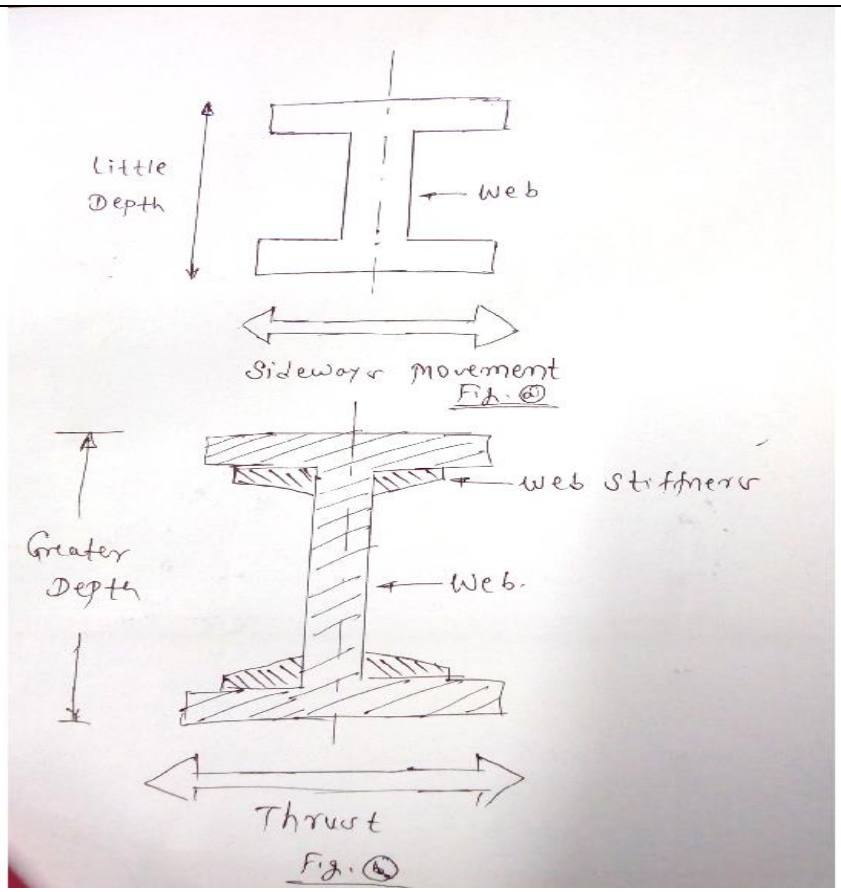 Above fig a shows that when the depth of I section is not much there is no chance of bending or twisting so stiffeners are not required. As the depth of I section i.e. the height of web increases the tendency of bending and twisting increases. So as to avoid this the web stiffeners are attached to strengthen the Section as shown in fig b.	2m (dia) 2m	
f)	To protect template from environmental or mechanical damage we require to care and also protection against damage. If the template is made up of wood there is a tendency to absorb moisture and get oversized so as to avoid this we have to carefully store wooden template with the help of some suitable protective clothing. If the template is made up of card board or hard board it should not get fold and preserved carefully to use for longer time. When the metal template is used it has the tendency to get corroded or rusted when comes in contact with some gases, moisture etc. So as to avoid this some lubricants, oil, and grease should be applied regularly on the surface of template.	4m	**4**

6.	Attempt any <u>four</u> of the following	4*4	16
a)	Templates as a guide for cutting processes; Profile templates with regard to oxy-fuel gas cutting are as shown in the figures below. In general, an external template is used when the piece to be cut from the plate is the component and an internal template when the piece cut from the plate is not required for the component. 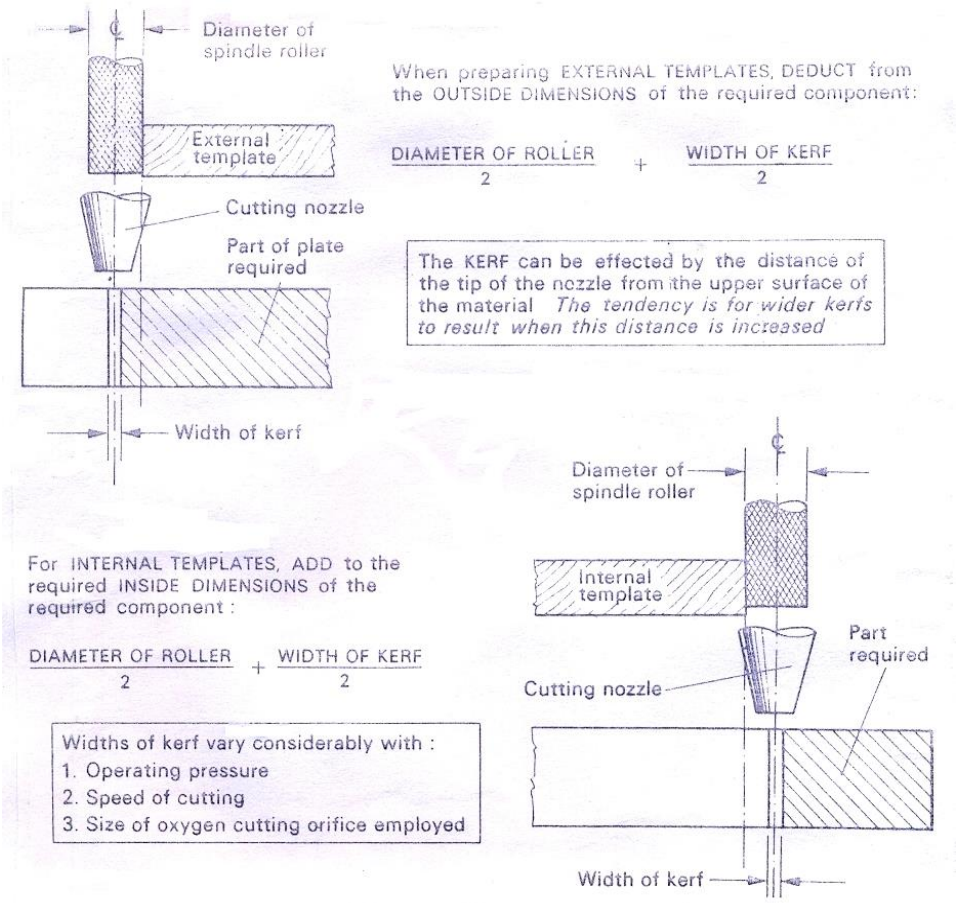 	04 marks	**04**
b)	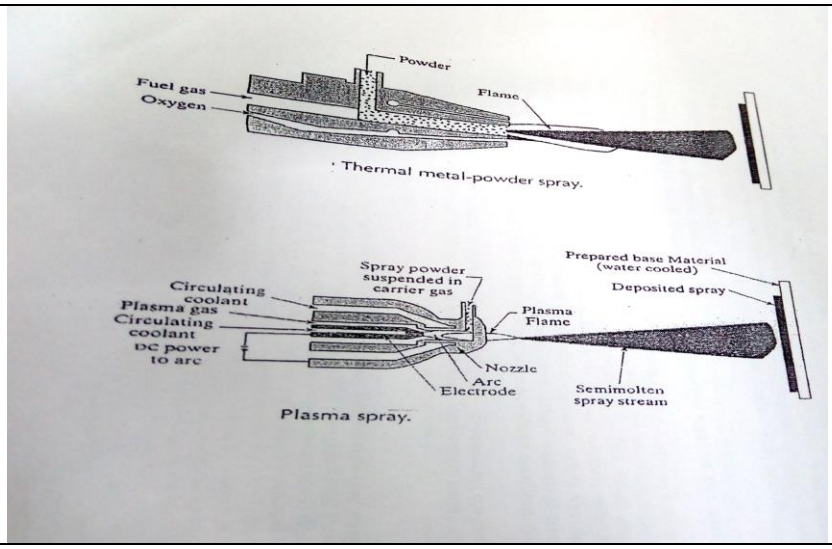 	02 m (dia)	**04**

	Working:- In this method a metallic or nonmetallic material in the form of wire or powder is fed into heat source which melts the material and sprays it on to the surface of the work piece. The work piece does not melt like it does in hard facing. May be used to improve corrosion resistance, thermal resistance, wear resistance because both metal and ceramic based coatings may be applied. Generally the work piece needs to be roughened up before spraying to help with adhesion of sprayed material.	2M	
c)	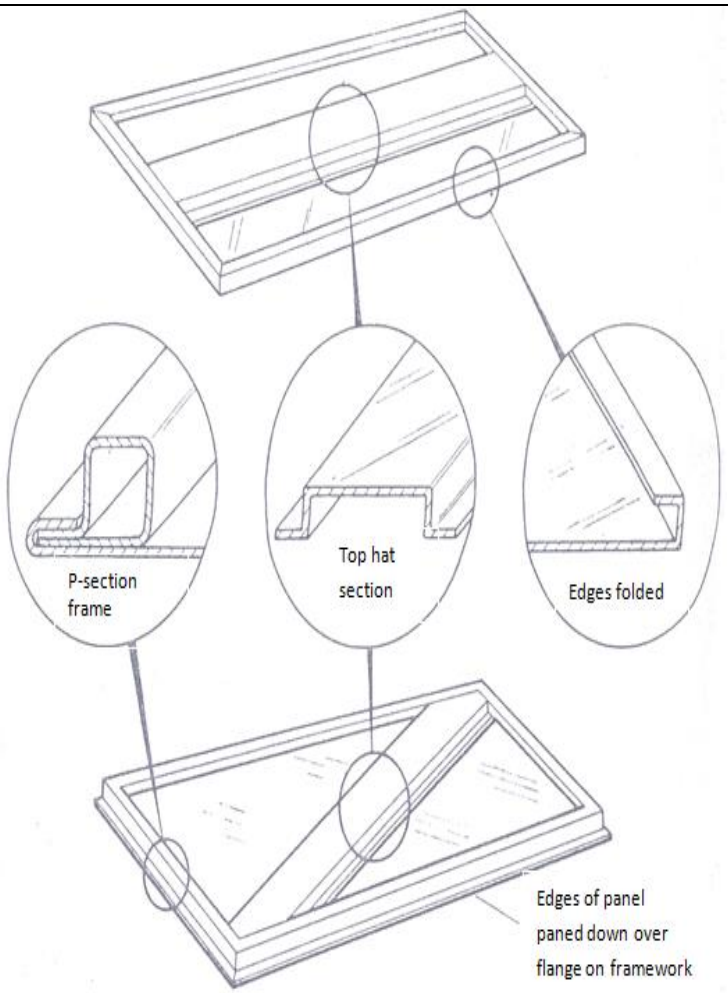 1)A large sheet metal panel may be stiffened with all four edges made rigid by folding. 'Top hat section' is used to stiffen the centre section of the panel and is usually secured in position by spot welding. 2)Another method of stiffening large sheet metal panels is to attach them to a rigid frame-work. The welded frame is fabricated from lengths of 'P-section' which has a very high Strength/weight ratio for a sheet metal section. All four edges of the panel are folded at 90^0 to a suitable width.	02m (dia) 2m	**04**

	The panel is then placed in position over the frame and the edges 'paned-down' over the flange on the 'P-section'. The centre of the panel is stiffened by means of a diagonal top-hat section.		
d)	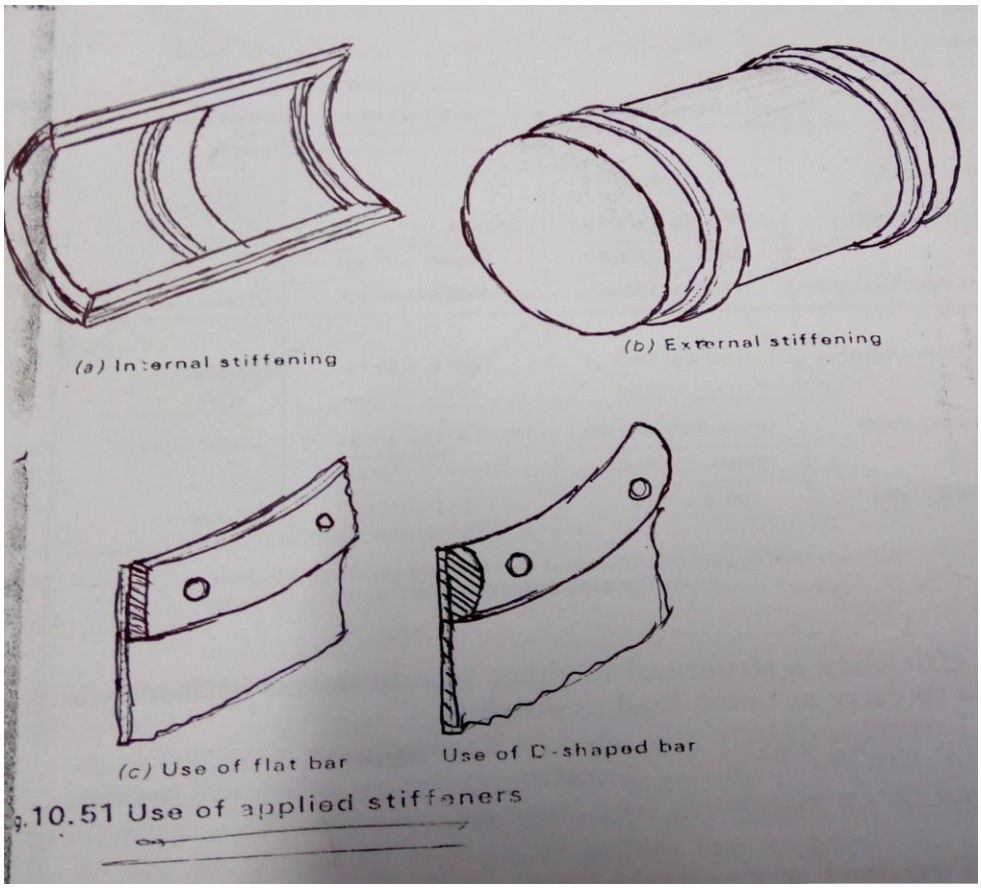 Fig illustrates an application of internal stiffening of a panel of circular shapes. The stiffening sections in this case rolled to correct contour and attached externally. When a sheet metal is too thick to allow the edge to be wired the edges may be stiffened by attaching either flat bar or D shaped bar as shown in fig.	02 m (DIA) 2M	**04**

e)	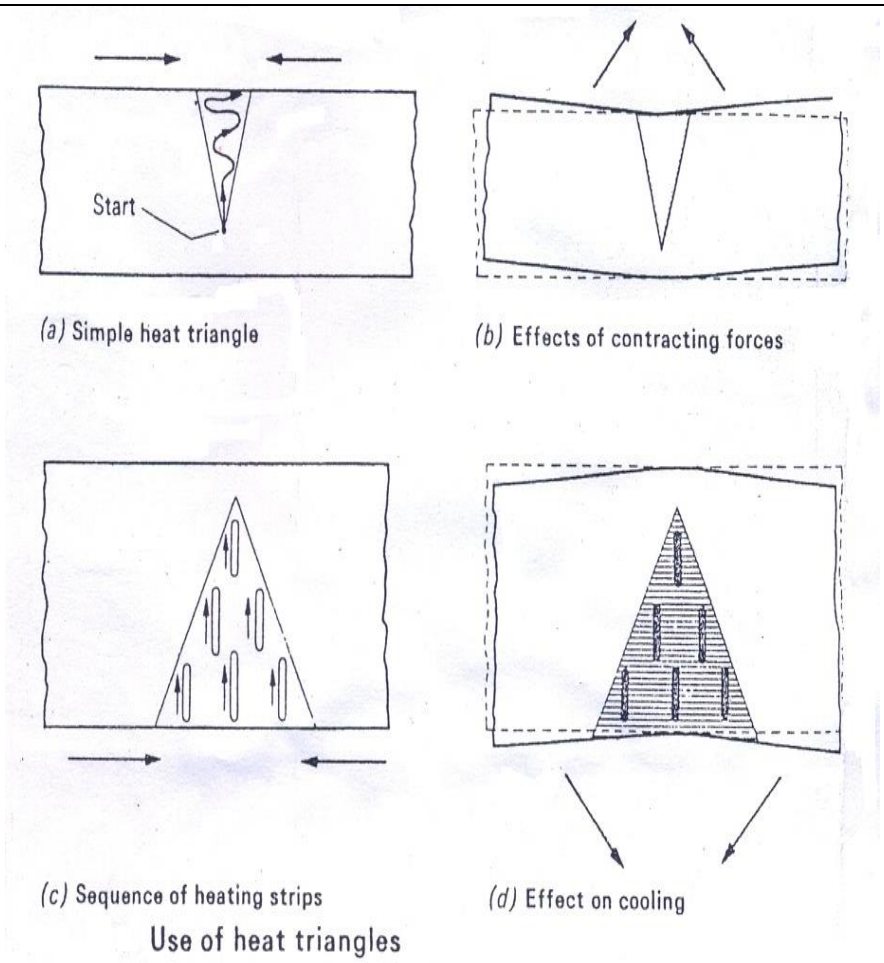 Use of heat triangles: The use of heat triangles for straightening thin angle and flat sections, and the use of 'triangles' of heat strips for the bending and straightening of plate and wide sections are as shown in the figures below. Simple heat triangles may be used as shown in figure a) below by starting with the heating torch at the apex of the triangle and working towards the base with a gradually widening zigzag movement. When allowed to cool, the base of the heat triangle will start to contract the most, and the contracting forces tend to cause the plate to bend, as shown in figure b) below. The resultant effects of using triangles of heat strips are exactly the same as for the simple heat triangles. Simple heat triangles are used for straightening of thin plate and light sections. Triangles of heat strips are preferred when bending or straightening thick plate and heavy sections. The order, in which the heat strips are applied, in the triangle, is shown below in figure c). Heating with the torch is commenced a short distance in from the edge of the plate, progressively heating from the outside inwards.	02 marks (DIA) 2M	**04**

f)	**Following are the applications of composites:-** 1)AEROSPACE APPLICATIONS:- One of the primary requirements of aerospace structural materials is that they should have low density and, at the same time, should be very stiff and strong. 2) Automotive Engineering Feasibility studies were carried out, since early seventies, to explore the possibilities of using composites in the exterior body panels, frameworks/chassis, bumpers, drive shafts, suspension systems, wheels, steering wheel columns and instrument panels of automotive vehicles. 3) Civil Engineering:- Composite materials are most popularly used in civil engineering applications for construction like RCC. 4) Marine Applications:- Strong, stiff and light composites are also very attractive materials for marine applications. GFRPs are being used for the last 3-4 decades to build canoes, yachts, speed boats and other workboats. 5) Composites also have extensive uses in electrical and electronic systems. 6) Composites are, now-a-days, preferred to other materials in fabrication of several important sports accessories	04 marks (any 4)	**04**